GEV

REFRIGERATION GASKETS
Custom-made

More than 70 profiles available

SPARE PARTS FOR ALL COMMERCIAL KITCHENS

Refrigeration gaskets
Custom-made

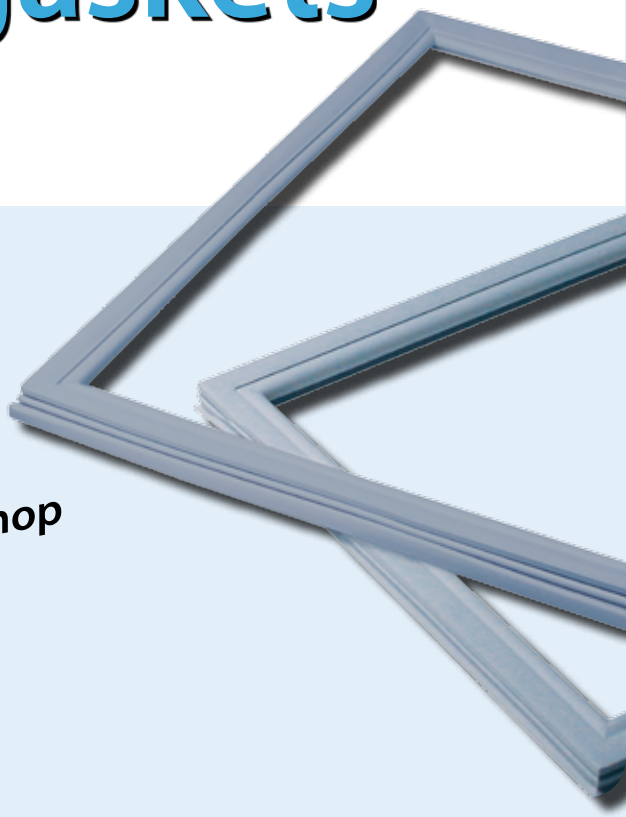

- Top quality with welded corners
- Over 70 different profiles
- Instant price calculation in the GEV Webshop

On the following pages you will find our extensive selection of custom-made gaskets.
Order today in our Webshop!

www.gev-online.co.uk
www.gev-online.com

Ready made gaskets

- 1,000 items
- 120 profiles
- For more than 100 manufacturers

All gaskets can be found in the GEV Webshop

www.gev-online.co.uk
www.gev-online.com

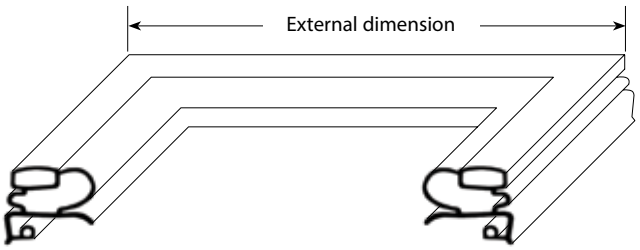

Threaded gaskets with magnet

– Profile illustrations in original size
– All dimensions in mm

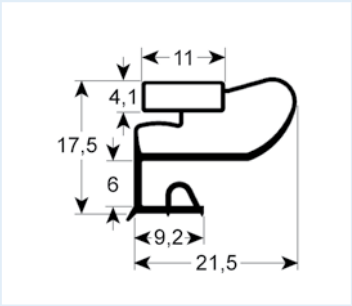

9663 3-5 days
Suitable for: Friulinox, Whirlpool

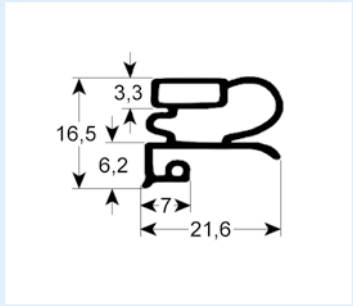

9030 3-5 days
Suitable for: Alpeninox, Art Serf, Asskühl, Dexion, Electrolux, Emainox, Küleg, Zanussi

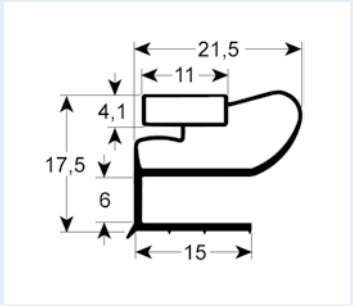

9664 3-5 days

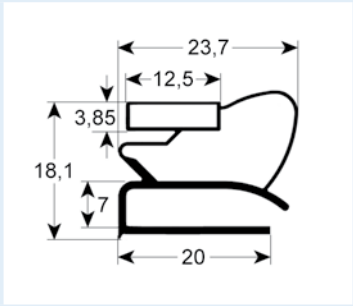

9954 3-5 days

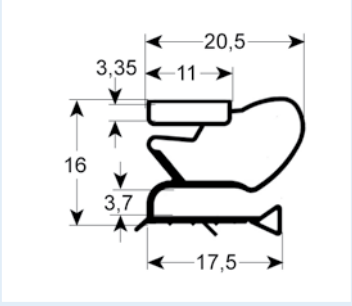

9515 3-5 days
Suitable for: Liebherr

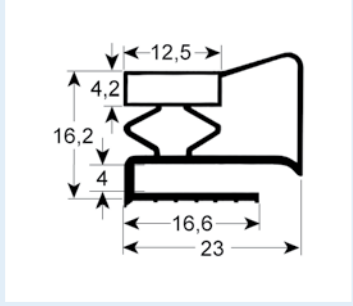

9953 3-5 days

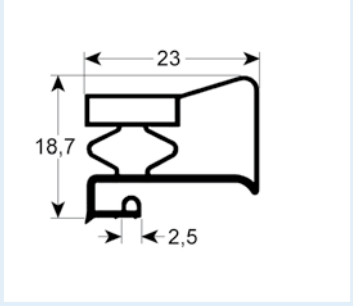

9949 3-5 days

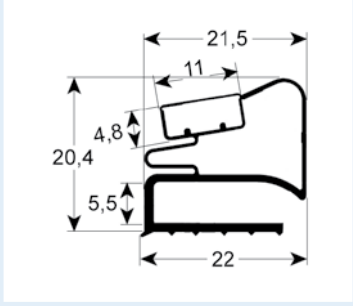

9526 3-5 days

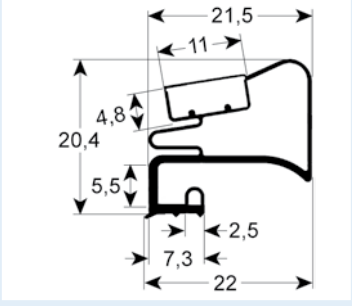

9525 3-5 days

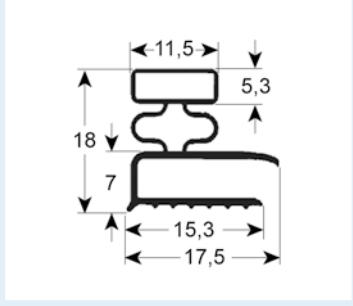

9031 3-5 days
Suitable for: Afinox, Mareno, Pastorfrigor, Sagi

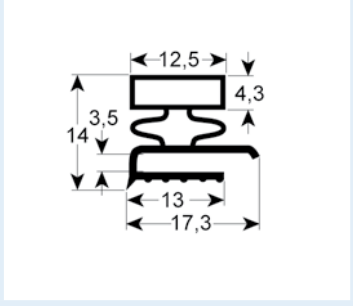

9140 3-5 days
Suitable for: Afinox, Angelo Po, Everlasting

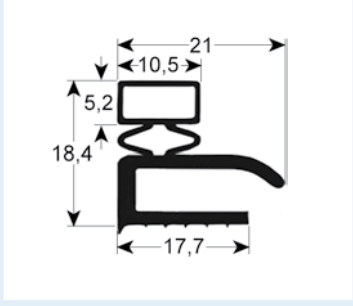

9106 3-4 weeks
Suitable for: Fagor, ISA, Mareno

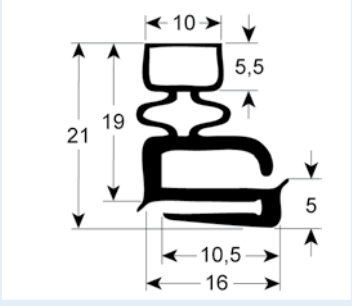

9100 3-4 weeks
Suitable for: Asskühl, Küleg

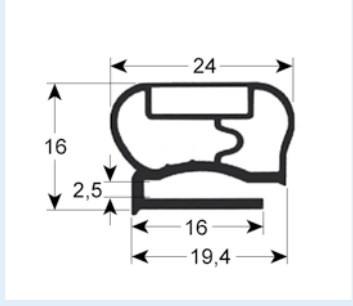

9200 3-5 days
Suitable for: Eisvoigt, Frigopol, Küleg

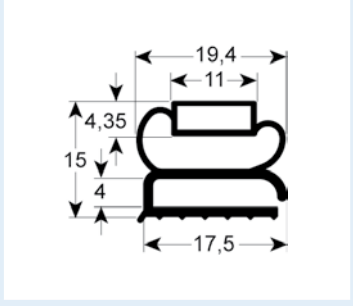

9207 3-5 days
Suitable for: Ambach, Angelo Po, Küleg, Sagi

Threaded gaskets without magnet

– Profile illustrations in original size
– All dimensions in mm

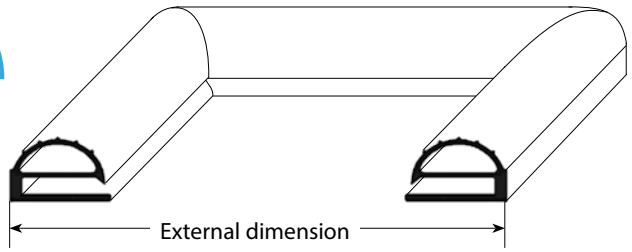

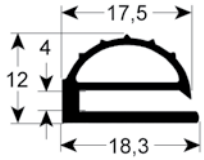

9102 3-5 days

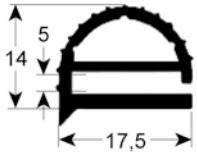

9104 3-5 days

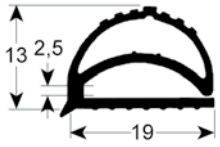

9158 3-5 days

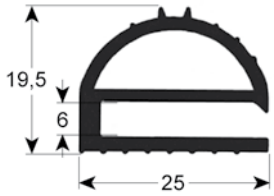

9169 3-4 weeks

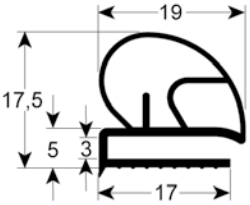

9710 3-5 days

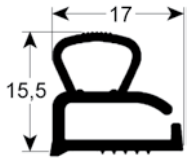

9605 3-5 days

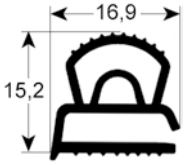

9610 3-5 days

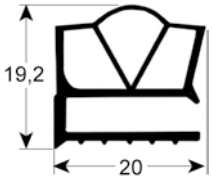

9189 3-5 days

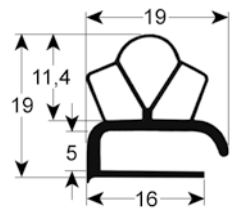

9191 3-5 days

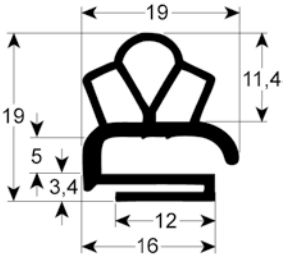

9138 3-5 days

Customise your own gasket.
Calculate and order online today.

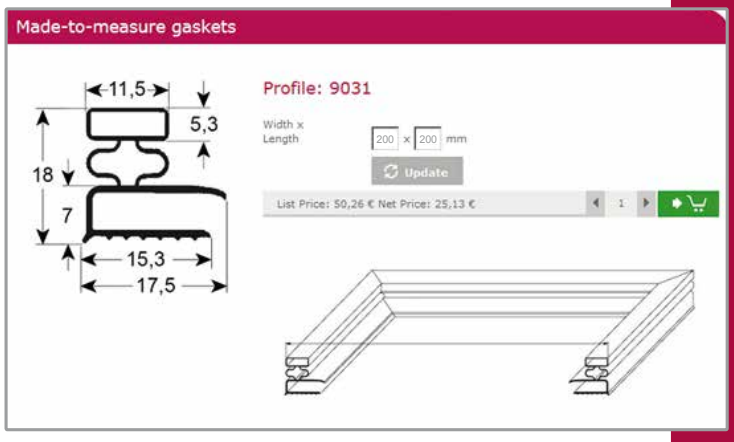

www.gev-online.co.uk
www.gev-online.com

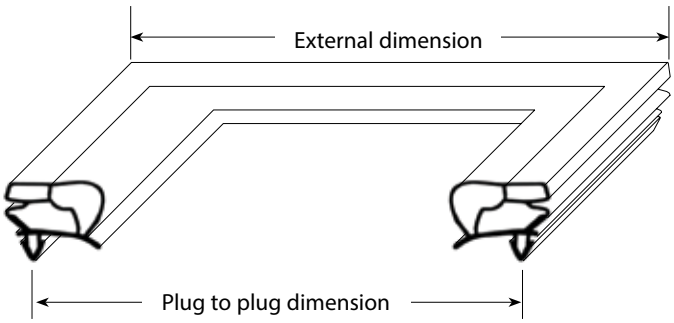

Plug-in gaskets with magnet

– Profile illustrations in original size
– All dimensions in mm

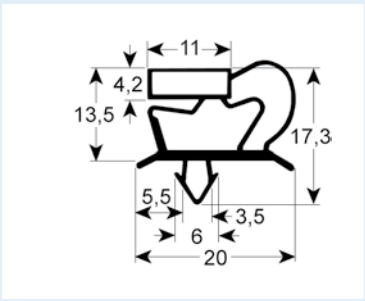

9048 3-5 days
Suitable for: Angelo Po, Coldline, Desmon, Electrolux, Everlasting, Friulinox, Icematic, Ilsa, Irinox, K+T, Mercatus, Polaris, Sagi, Tecnodom, Zanussi

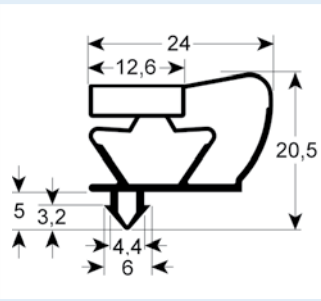

9043 3-5 days

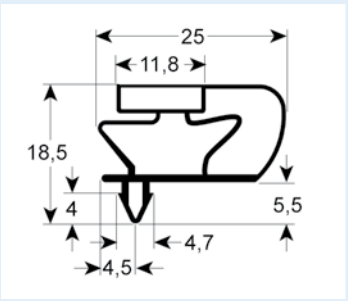

9799 3-5 days

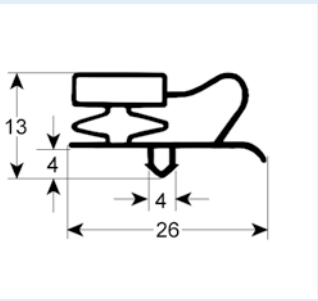

9013 3-5 days

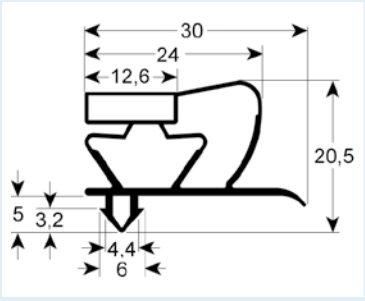

9045 3-5 days
Suitable for: Incold

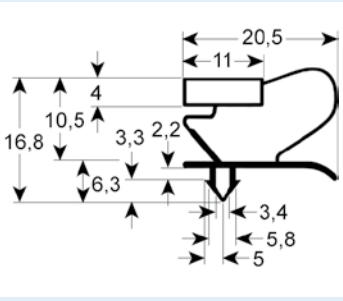

9053 3-5 days

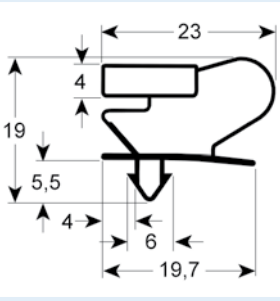

9046 3-5 days
Suitable for: Asskühl, Sagi

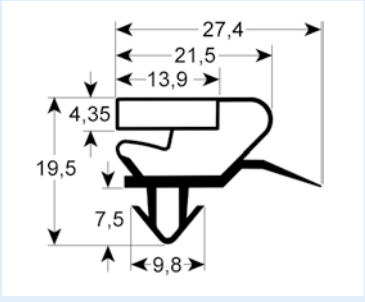

9398 3-5 days

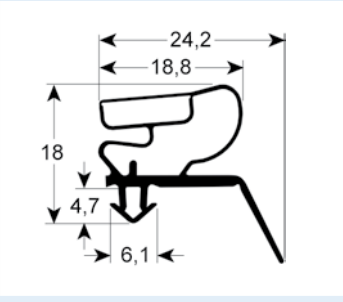

9400 3-5 days

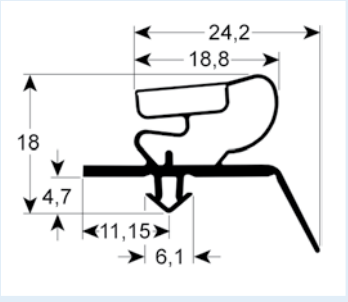

9401 3-5 days

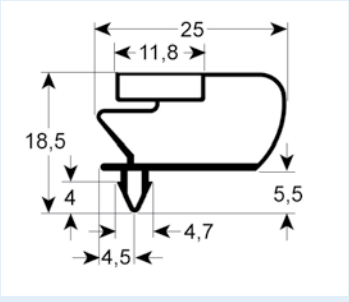

9796 3-5 days
Suitable for: INOMAK Comercial

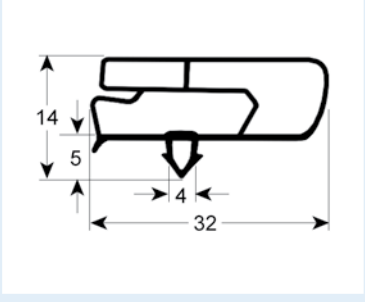

9797 3-5 days

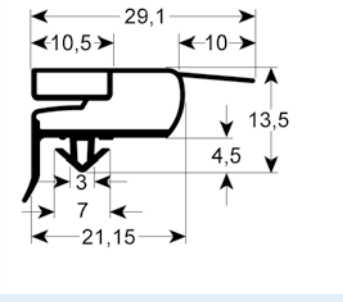

9773 3-5 days

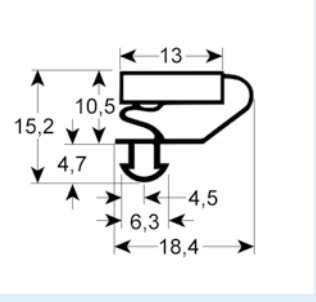

9703 3-5 days
Suitable for: Afinox, Alaska, Alpeninox, Dexion, Friulinox, ISA, Polaris, Studio 54, Zoin

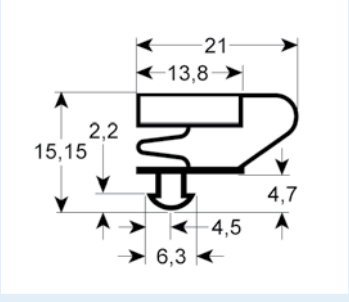

9704 3-5 days

Plug-in gaskets with magnet

– Profile illustrations in original size
– All dimensions in mm

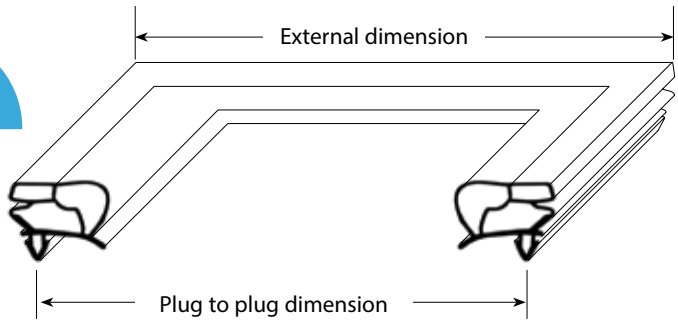

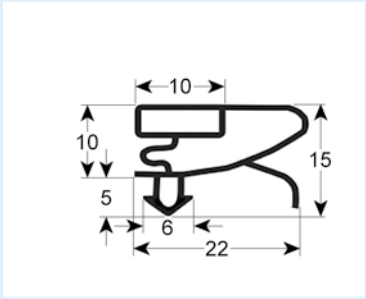

9753 3-5 days

Suitable for: Angelo Po, C&D, Enofrigo, Everlasting, Gemm, IRF, ISA, Zanussi

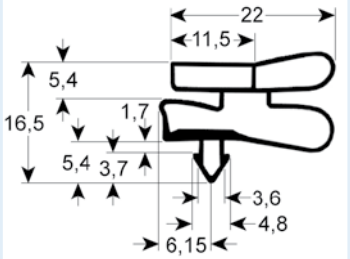

9151 3-5 days

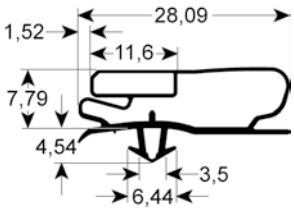

9500 3-5 days

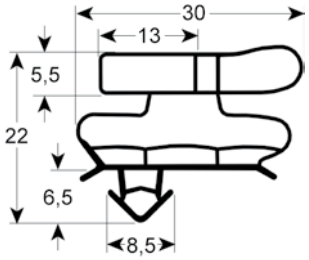

9505 3-5 days

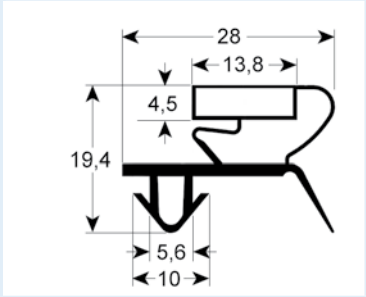

9044 3-5 days

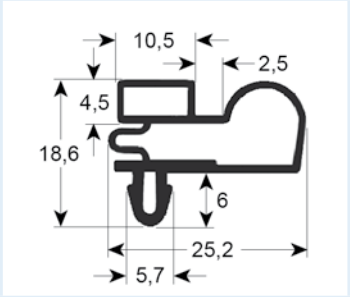

9010 3-5 days

Suitable for: Desmon, Framec, Groen, Iarp, Iberna, Ilsa, Mondial Elite, Scotsman, Tefcold

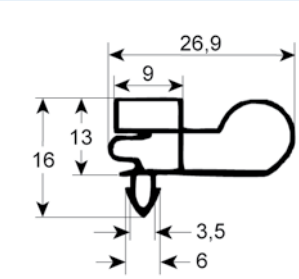

9303 3-4 weeks

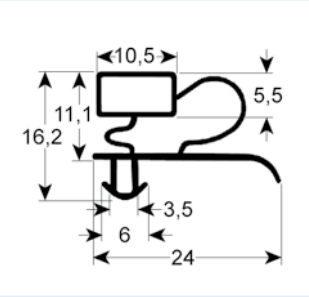

9333 3-5 days

Suitable for: Angelo Po, C&D, Dexion, Electrolux, Enofrigo, Everlasting, Fagor, Gelart, Gemm, Iberna, ICV, Isa, Sagi, Zanussi

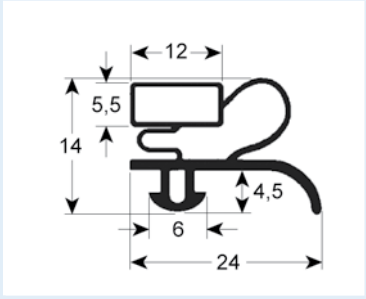

9012 3-5 days

Suitable for: Angelo Po, C&D, Emmepi, Fagor, Gelart, ICV, ISA, Sagi

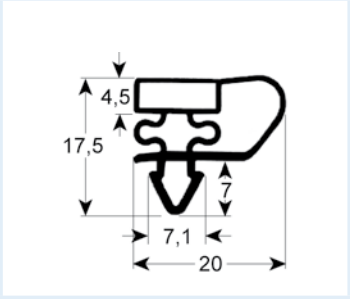

9153 3-5 days

Suitable for: IME Turbo, Mafirol, Williams, Gemm, Gamko

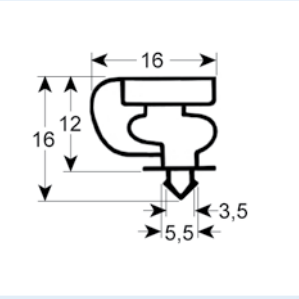

9154 3-5 days

Suitable for: Tecfrigo S.P.A.

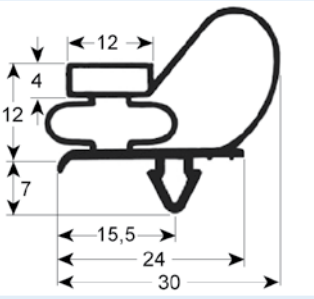

9743 3-5 days

Suitable for: EKU, IME Turbo, Küleg, Telewig, Ungermann

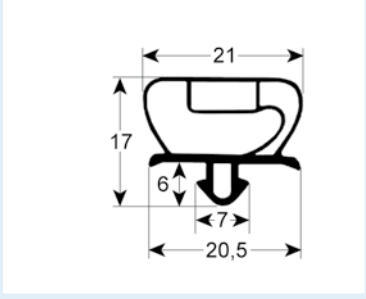

9235 3-5 days

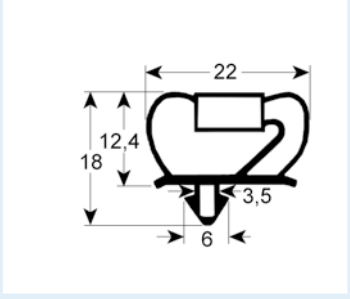

9237 3-5 days

Suitable for: Electrolux, Misa, Zanussi

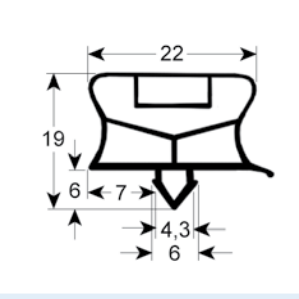

9794 3-5 days

Suitable for: Afinox, Electrolux, Friulinox, Polaris, Whirlpool, Zanussi

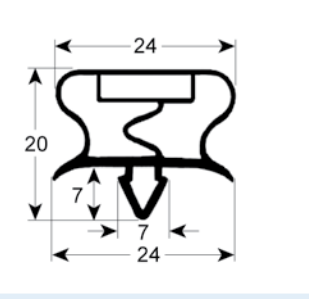

9195 3-5 days

Suitable for: Cool Compact, Foster, IME Turbo, Ilsa, Irinox, Williams

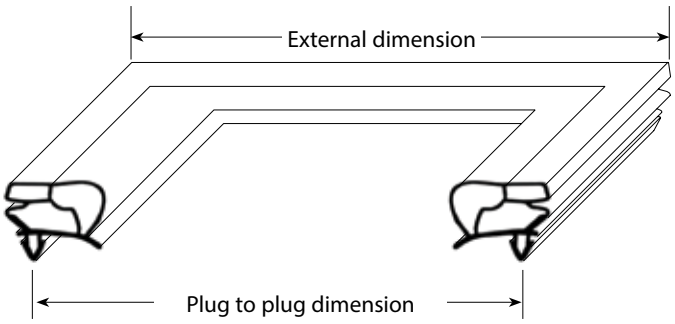

Plug-in gaskets with magnet

– Profile illustrations in original size
– All dimensions in mm

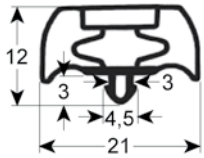

9252 3-5 days
Suitable for: Franke, LTH

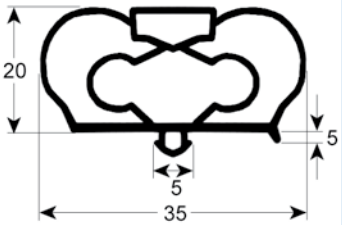

9798 3-5 days

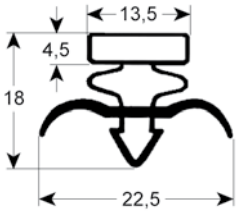

9171 3-5 days
Suitable for: Cool Compact, Eisfink, Eisvoigt, Foster, Frigopol, True

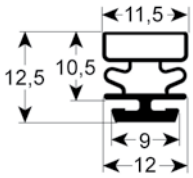

9322 3-5 days
Suitable for: BBC, Ideal, Kälte2000

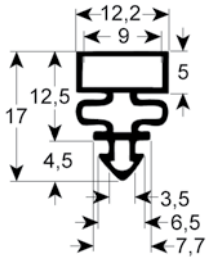

9313 3-5 days

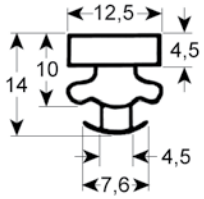

9373 3-5 days
Suitable for: Electrolux, Fagor, Küleg, Mondial Elite, Ronda, Zanussi

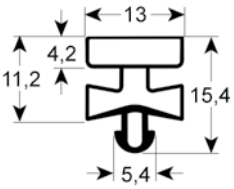

9380 3-5 days

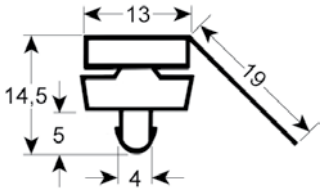

9385 3-5 days

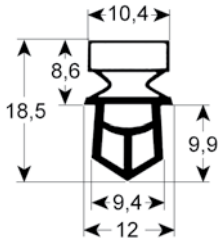

9325 3-5 days

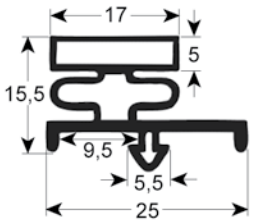

9185 3-4 weeks
Suitable for: Beverage Air, Franke, Rieber

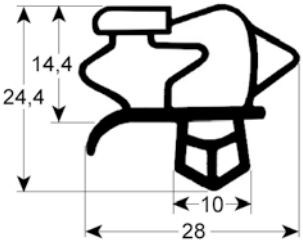

9793 3-5 days
Suitable for: Frigowell, LTH

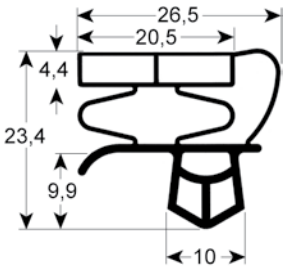

9147 3-5 days

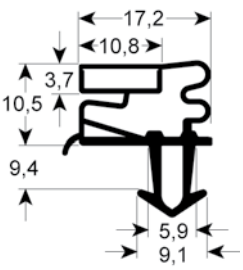

9275 3-5 days

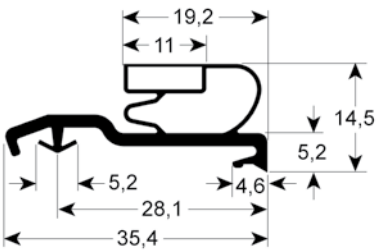

9724 3-5 days

Plug-in gaskets with magnet

– Profile illustrations in original size
– All dimensions in mm

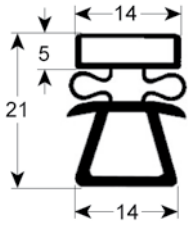

9162 3-5 days

Suitable for: Eisfink, Eisvoigt, Franke, Hagola, Salvis

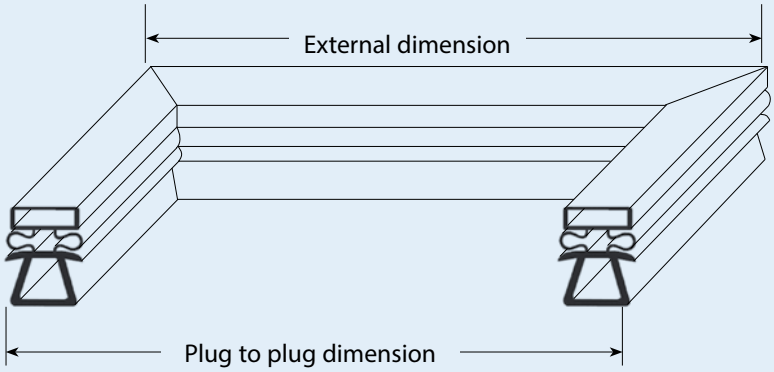

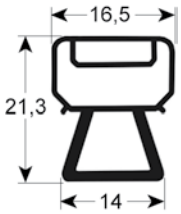

9166 3-5 days

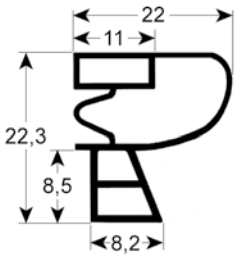

9950 3-5 days

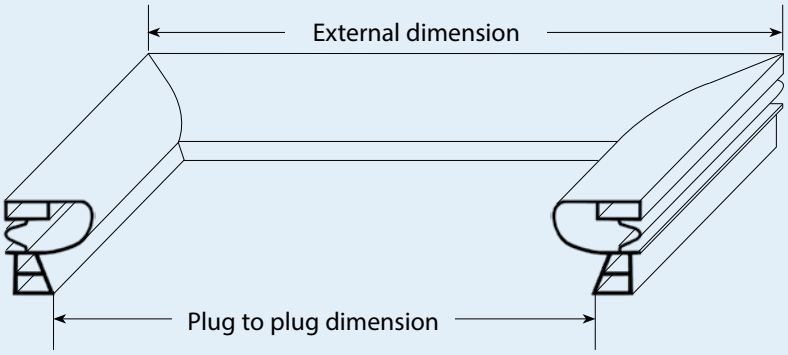

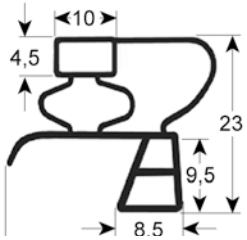

9783 3-5 days

Suitable for: EKU, Mareno, Silko

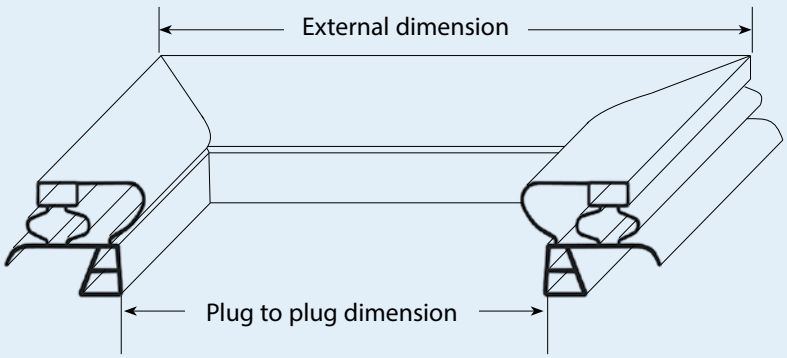

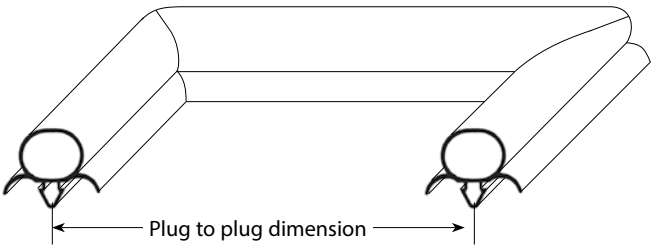

Plug-in gaskets without magnet

– Profile illustrations in original size
– All dimensions in mm

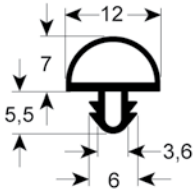

9722 3-5 days

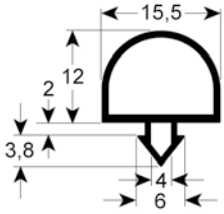

9728 3-5 days

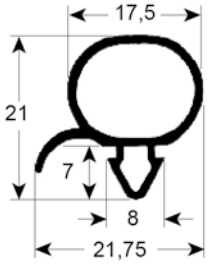

9196 3-5 days

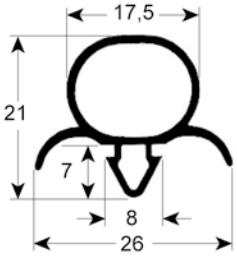

9192 3-5 days

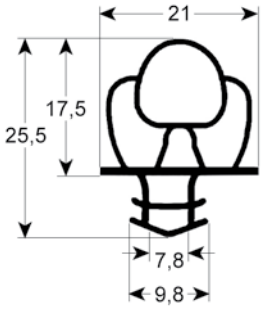

9650 3-5 days

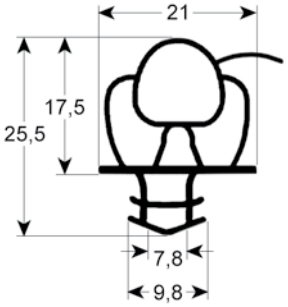

9651 3-5 days

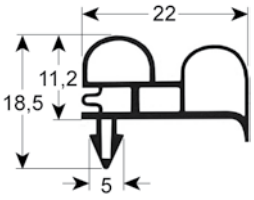

9420 3-5 days

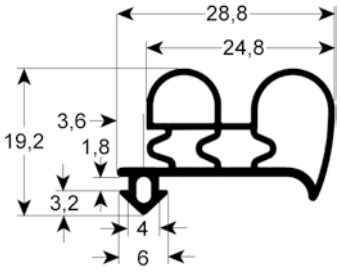

9430 3-5 days

GEV no. 801490
Cleaner spray for refrigeration gaskets 500ml

☐ ENQUIRY ☐ ORDER

Company stamp

Contact

Customer number

Your order number/reference

Delivery address
incl. post code

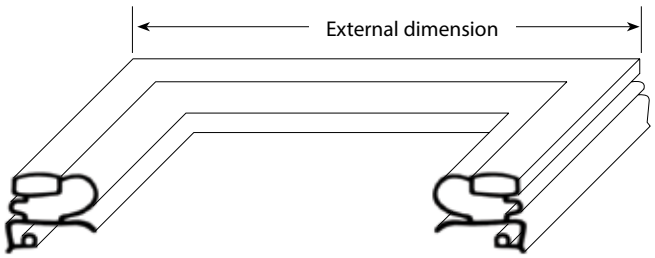

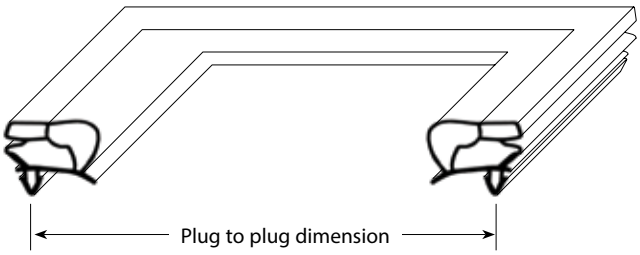

Quantity	Profile no.	Select type	Short side (mm)	Long side (mm)
		☐ External dimension ☐ Plug to plug dimension		
		☐ External dimension ☐ Plug to plug dimension		
		☐ External dimension ☐ Plug to plug dimension		
		☐ External dimension ☐ Plug to plug dimension		
		☐ External dimension ☐ Plug to plug dimension		

Please note custom made parts cannot be returned

P021100105

UK

GEV Catering Spares Ltd
307-309 Totemic House
Springfield Business Park
Caunt Road
Grantham
NG31 7FZ
Phone: 01476 583922
Fax: 01476 514640
info@gev-online.co.uk
www.gev-online.co.uk

GEV Großküchen-Ersatzteil-Vertrieb GmbH
Gadastr. 4
85232 Bergkirchen
Germany
Tel.: +49 (0)8142 6522-50
Fax: +49 (0)8142 6522-629
info@gev-online.com
www.gev-online.com