pre-rinse units 2

CLASSIC..... 58
PREMIUM PLUS..... 68
PREMIUM PLUS AUTOMATIC..... 75
PREMIUM ABSOLUTE..... 80
INOX..... 82
INOX AUTOMATIC..... 85
CLASSIC AMERICAN Style..... 88
PREMIUM AMERICAN Style..... 94
spare parts of other producers..... 100

pre-rinse units

CLASSIC

with pillar tap

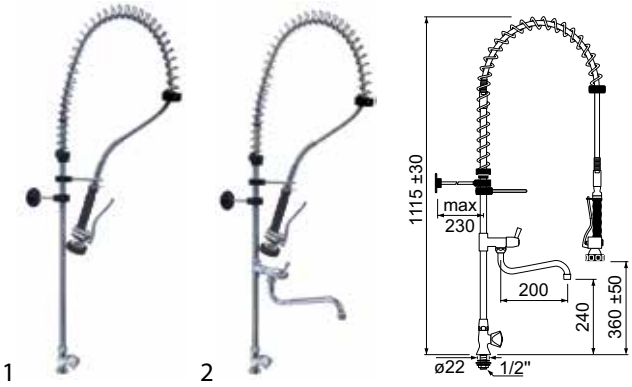

fig.	GEV No.	upper part	handle type	connection
1	548800	tap head 1/2"	triangular	1/2"
1	548815	ceramic tap head 1/2"	triangular	1/2"
2	548801	tap head 1/2"	triangular	1/2"
2	548816	ceramic tap head 1/2"	triangular	1/2"

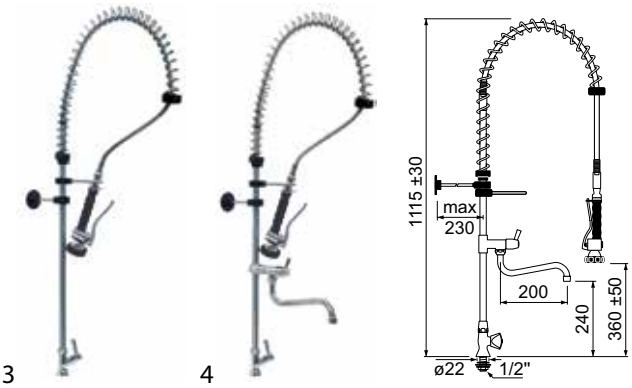

fig.	GEV No.	upper part	handle type	connection
3	548902	ceramic tap head 1/2"	lever	1/2"
4	548903	ceramic tap head 1/2"	lever	1/2"

with monobloc tap

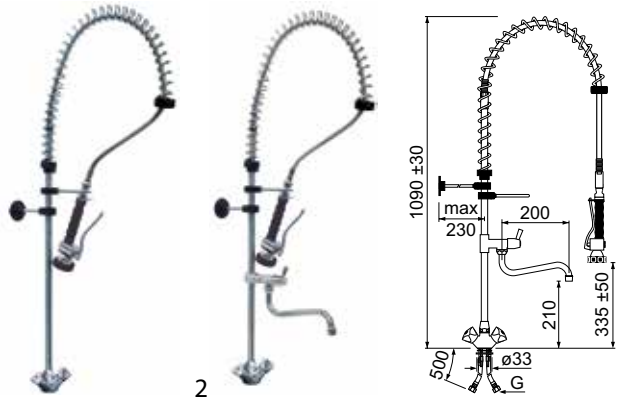

fig.	GEV No.	upper part	handle type	G
1	548802	tap head 1/2"	triangular	3/8"
1	548803	tap head 1/2"	triangular	1/2"
1	548817	ceramic tap head 1/2"	triangular	3/8"
1	548818	ceramic tap head 1/2"	triangular	1/2"
2	548804	tap head 1/2"	triangular	3/8"
2	548805	tap head 1/2"	triangular	1/2"
2	548819	ceramic tap head 1/2"	triangular	3/8"
2	548820	ceramic tap head 1/2"	triangular	1/2"

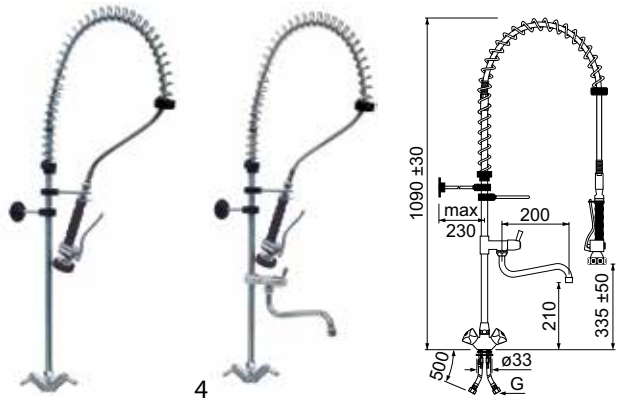

fig.	GEV No.	upper part	handle type	G
3	548904	ceramic tap head 1/2"	lever	3/8"
3	548906	ceramic tap head 1/2"	lever	1/2"
4	548905	ceramic tap head 1/2"	lever	3/8"
4	548907	ceramic tap head 1/2"	lever	1/2"

Find the complete and up-to-date range of products in our GEV Webshop

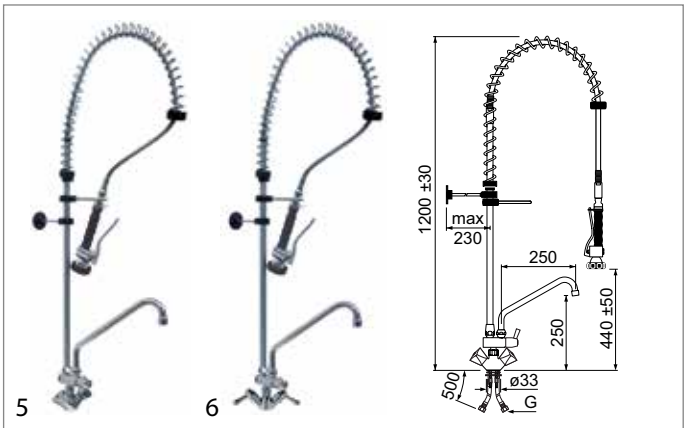

fig.	GEV No.	upper part	handle type	G
5	542520	tap head 1/2”	triangular	3/8”
5	542521	tap head 1/2”	triangular	1/2”
5	542244	ceramic tap head 1/2”	triangular	3/8”
5	542245	ceramic tap head 1/2”	triangular	1/2”
6	542522	ceramic tap head 1/2”	with lever handle	3/8”
6	542523	ceramic tap head 1/2”	with lever handle	1/2”

with bridge mixer tap

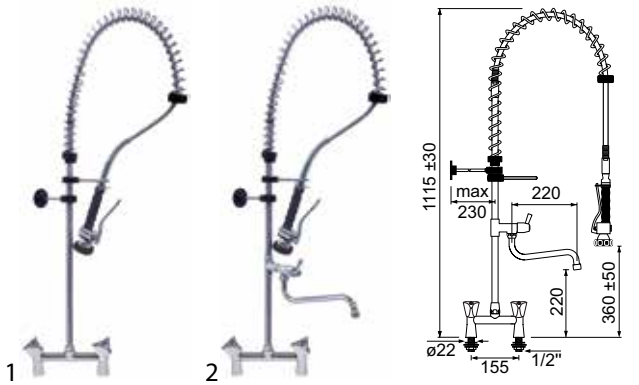

technical data:
hole distance 155mm

fig.	GEV No.	upper part	handle type	connection
1	548910	tap head 1/2”	triangular	1/2”
1	548912	ceramic tap head 1/2”	triangular	1/2”
2	548911	tap head 1/2”	triangular	1/2”
2	548913	ceramic tap head 1/2”	triangular	1/2”

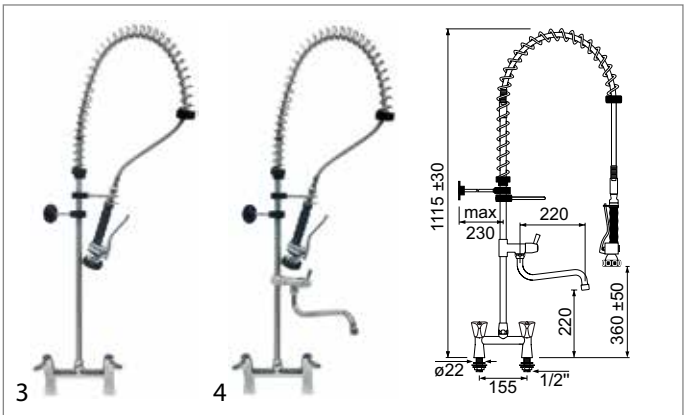

technical data:
hole distance 155mm

fig.	GEV No.	upper part	handle type	connection
3	548914	ceramic tap head 1/2”	lever	1/2”
4	548915	ceramic tap head 1/2”	lever	1/2”

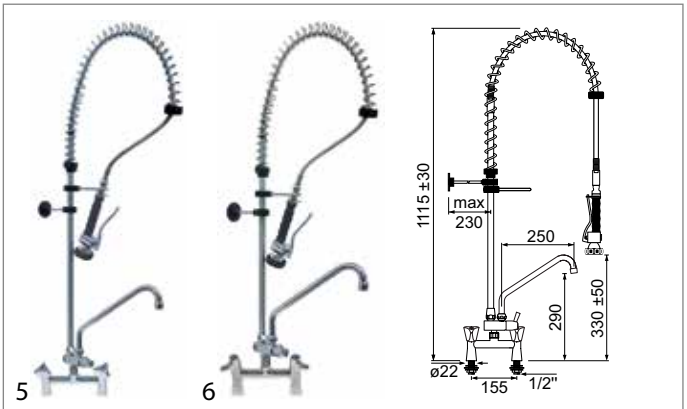

technical data:
hole distance 155mm

fig.	GEV No.	upper part	handle type	connection
5	542246	tap head 1/2”	triangular	1/2”
5	542247	ceramic tap head 1/2”	triangular	1/2”
6	542248	ceramic tap head 1/2”	lever	1/2”

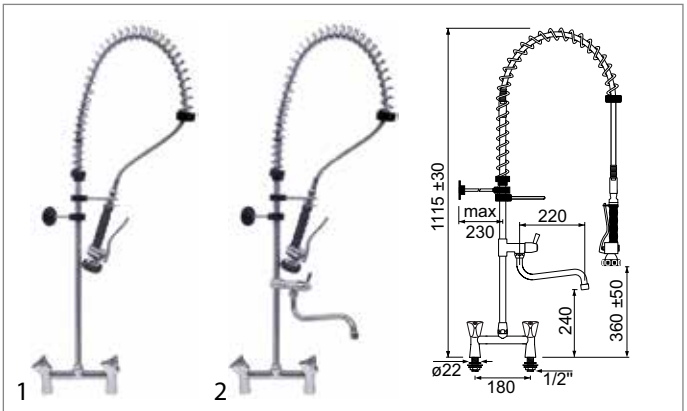

technical data:
hole distance 180mm

fig.	GEV No.	upper part	handle type	connection
1	545049	tap head 1/2”	triangular	1/2”
1	545153	ceramic tap head 1/2”	triangular	1/2”
2	545057	tap head 1/2”	triangular	1/2”
2	545154	ceramic tap head 1/2”	triangular	1/2”

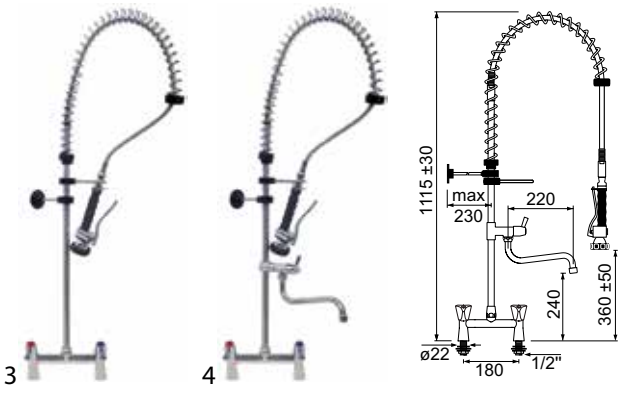

technical data:
hole distance 180mm

fig.	GEV No.	upper part	handle type	connection
3	545107	ceramic tap head 1/2"	lever	1/2"
4	545108	ceramic tap head 1/2"	lever	1/2"

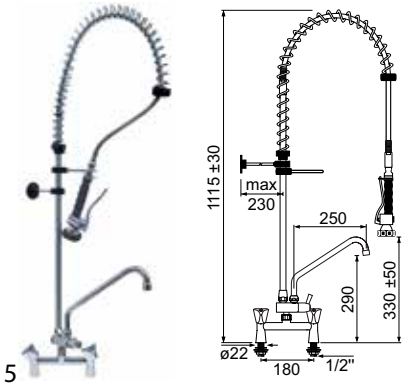

technical data:
hole distance 180mm

fig.	GEV No.	upper part	handle type	connection
5	545155	tap head 1/2"	triangular	1/2"
5	545156	ceramic tap head 1/2"	triangular	1/2"

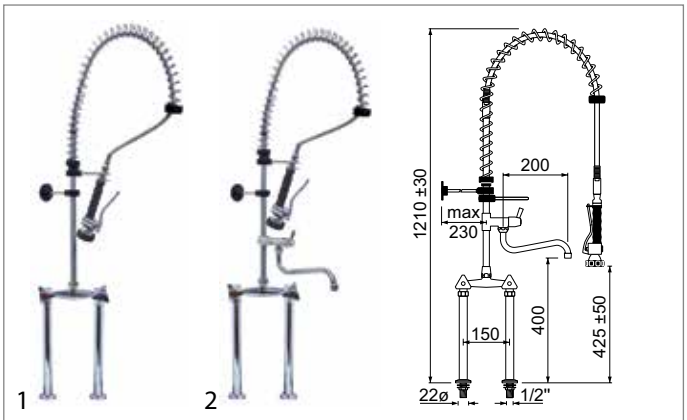

technical data:
hole distance 150mm

fig.	GEV No.	upper part	handle type	connection
1	548810	tap head 1/2"	triangular	1/2"
1	548825	ceramic tap head 1/2"	triangular	1/2"
2	548811	tap head 1/2"	triangular	1/2"
2	548826	ceramic tap head 1/2"	triangular	1/2"

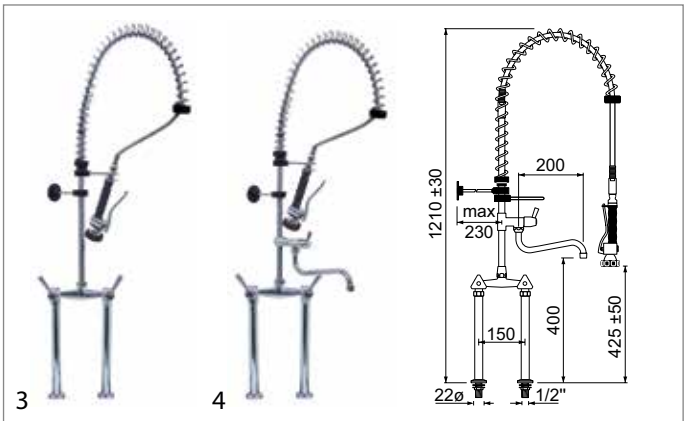

technical data:
hole distance 150mm

fig.	GEV No.	upper part	handle type	connection
3	548916	ceramic tap head 1/2"	lever	1/2"
4	548917	ceramic tap head 1/2"	lever	1/2"

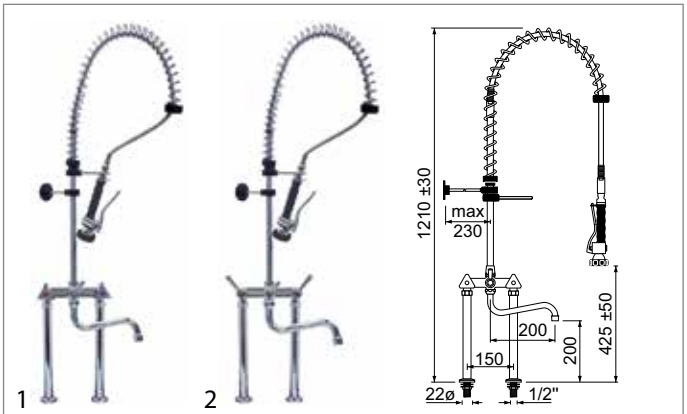

technical data:
hole distance 150mm

fig.	GEV No.	upper part	handle type	connection
1	548814	tap head 1/2"	triangular	1/2"
1	548829	ceramic tap head 1/2"	triangular	1/2"
2	548920	ceramic tap head 1/2"	lever	1/2"

with wall-mounted water tap

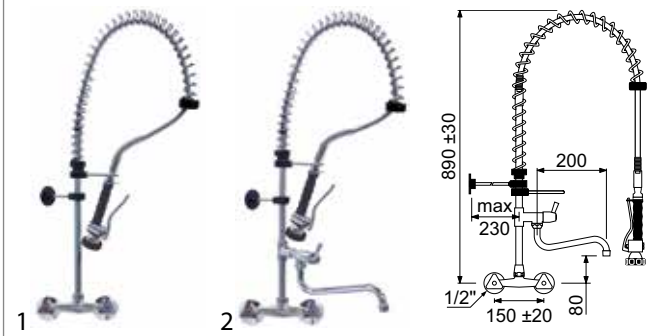

technical data:
hole distance 150±20mm

fig.	GEV No.	upper part	handle type	connection
1	548808	tap head 1/2"	triangular	1/2"
1	548823	ceramic tap head 1/2"	triangular	1/2"
2	548809	tap head 1/2"	triangular	1/2"
2	548824	ceramic tap head 1/2"	triangular	1/2"

Find the complete and up-to-date range of products in our GEV Webshop

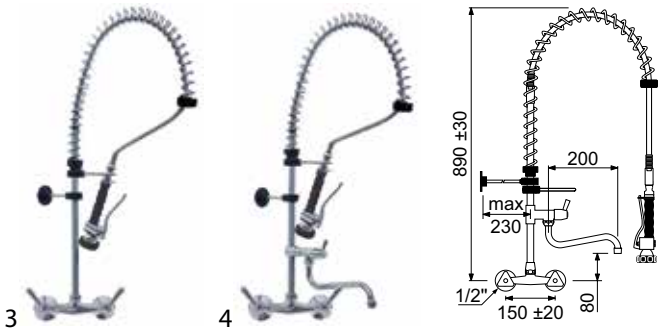

technical data:
hole distance 150±20mm

fig.	GEV No.	upper part	handle type	connection
3	548918	ceramic tap head 1/2"	lever	1/2"
4	548930	ceramic tap head 1/2"	lever	1/2"

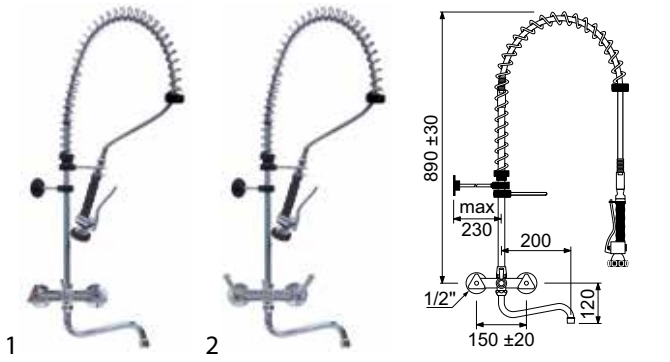

technical data:
hole distance 150±20mm

fig.	GEV No.	upper part	handle type	connection
1	548812	tap head 1/2"	triangular	1/2"
1	548827	ceramic tap head 1/2"	triangular	1/2"
2	548921	ceramic tap head 1/2"	lever	1/2"

with single lever monobloc tap

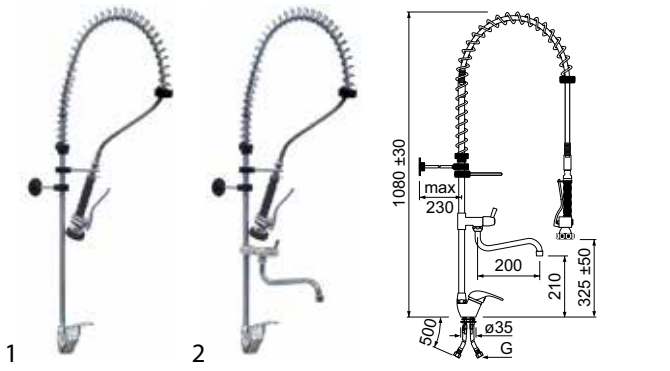

fig.	GEV No.	cartridge	G
1	548830	ceramic cartridge ø 40mm	3/8"
1	548831	ceramic cartridge ø 40mm	1/2"
2	548832	ceramic cartridge ø 40mm	3/8"
2	548833	ceramic cartridge ø 40mm	1/2"

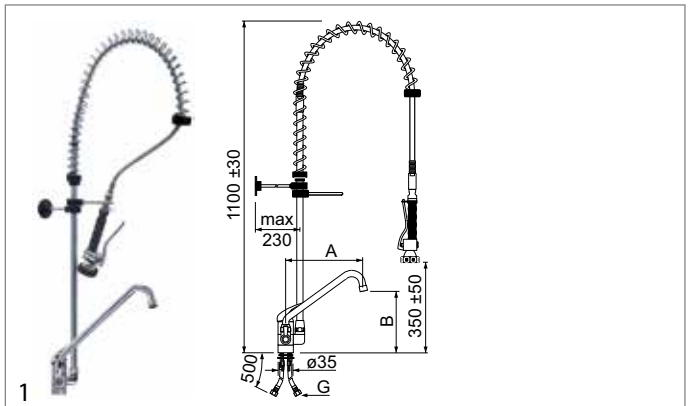

fig.	GEV No.	cartridge	A (mm)	B (mm)	G
1	545114	ceramic cartridge ø 40mm	200	185	3/8"
1	545115	ceramic cartridge ø 40mm	200	185	1/2"
1	545116	ceramic cartridge ø 40mm	250	225	3/8"
1	545117	ceramic cartridge ø 40mm	250	225	1/2"
1	545094	ceramic cartridge ø 40mm	300	250	3/8"
1	545095	ceramic cartridge ø 40mm	300	250	1/2"

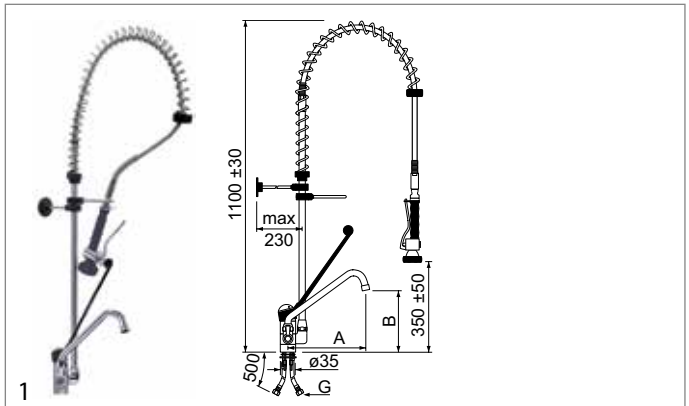

fig.	GEV No.	cartridge	A (mm)	B (mm)	G
1	545096	ceramic cartridge ø 40mm	200	160	3/8"
1	545099	ceramic cartridge ø 40mm	200	160	1/2"
1	545098	ceramic cartridge ø 40mm	250	200	3/8"
1	545104	ceramic cartridge ø 40mm	250	200	1/2"
1	545092	ceramic cartridge ø 40mm	300	250	3/8"
1	545093	ceramic cartridge ø 40mm	300	250	1/2"

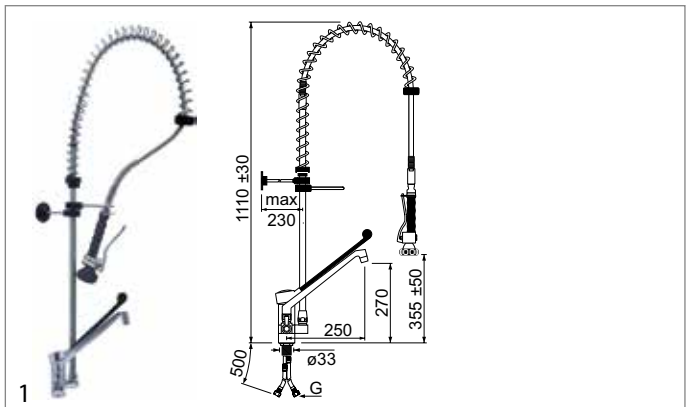

fig.	GEV No.	cartridge	spout length (mm)	spout height (mm)	G
1	547343	ceramic cartridge ø 47mm	250	270	3/8"
1	547344	ceramic cartridge ø 47mm	250	270	1/2"

with single lever bridge mixer tap

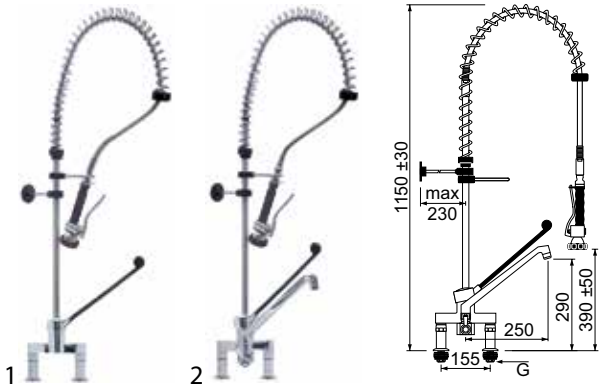

technical data:
hole distance 155mm

fig.	GEV No.	cartridge	spout length (mm)	spout height (mm)	G
1	548932	ceramic cartridge ø 47mm	-	-	1/2"
1	548931	ceramic cartridge ø 47mm	-	-	3/4"
2	548925	ceramic cartridge ø 47mm	250	290	1/2"
2	548924	ceramic cartridge ø 47mm	250	290	3/4"

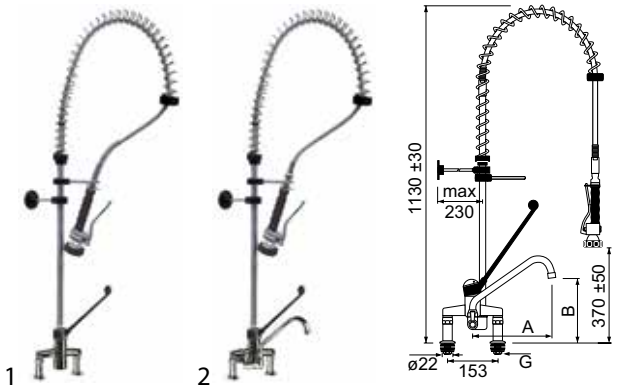

technical data:
hole distance 153mm

fig.	GEV No.	cartridge	A (mm)	B (mm)	G
1	549798	ceramic cartridge ø 40mm	-	-	1/2"
1	549829	ceramic cartridge ø 40mm	-	-	3/4"
2	549796	ceramic cartridge ø 40mm	200	180	1/2"
2	549799	ceramic cartridge ø 40mm	200	180	3/4"
2	549492	ceramic cartridge ø 40mm	250	210	1/2"
2	549807	ceramic cartridge ø 40mm	250	210	3/4"
2	549797	ceramic cartridge ø 40mm	300	260	1/2"
2	549818	ceramic cartridge ø 40mm	300	260	3/4"

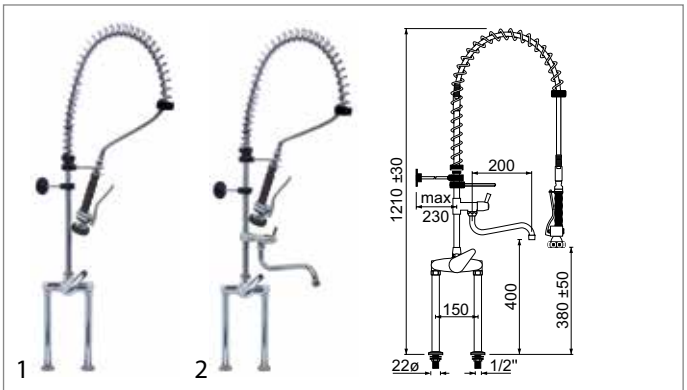

technical data:
hole distance 150mm

fig.	GEV No.	cartridge	connection
1	548840	ceramic cartridge ø 40mm	1/2"
2	548841	ceramic cartridge ø 40mm	1/2"

with single lever wall-mounted water tap

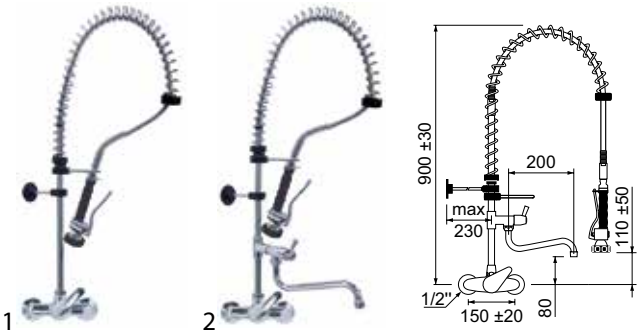

technical data:
hole distance 150±20mm

fig.	GEV No.	cartridge	connection
1	548838	ceramic cartridge ø 40mm	1/2"
2	548839	ceramic cartridge ø 40mm	1/2"

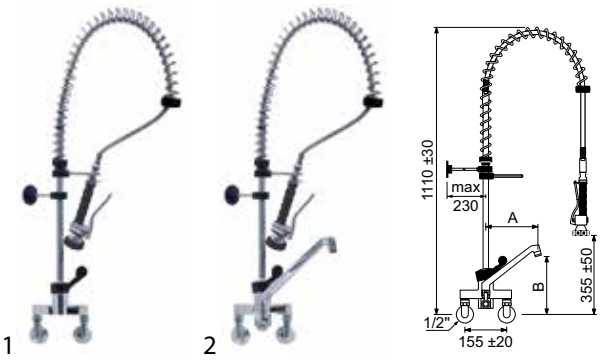

technical data:
hole distance 155±20mm

fig.	GEV No.	cartridge	A (mm)	B (mm)	connection
1	548935	ceramic cartridge ø 47mm	-	-	1/2"
2	548937	ceramic cartridge ø 47mm	200	200	1/2"
2	548938	ceramic cartridge ø 47mm	250	240	1/2"

Find the complete and up-to-date range of products in our GEV Webshop

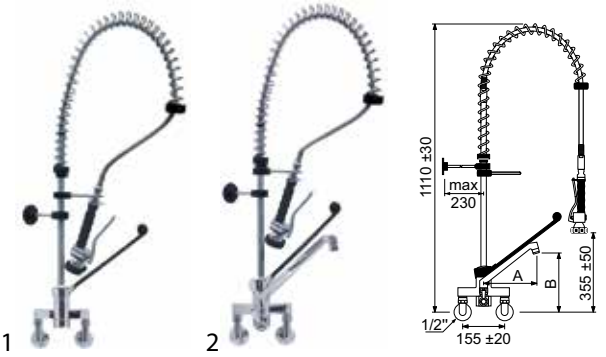

technical data:
hole distance 155±20mm

fig.	GEV No.	cartridge	A (mm)	B (mm)	connection
1	548936	ceramic cartridge ø 47mm	-	-	1/2"
2	548939	ceramic cartridge ø 47mm	200	215	1/2"
2	548940	ceramic cartridge ø 47mm	250	260	1/2"

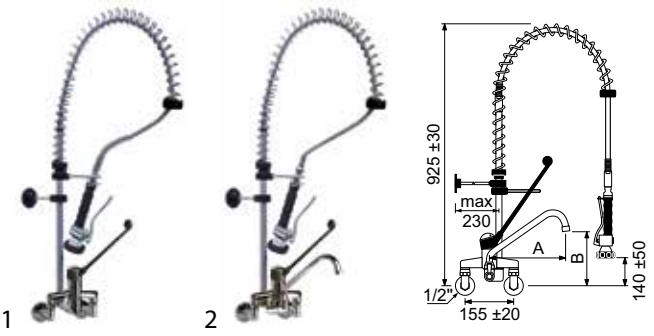

technical data:
hole distance 155±20mm

fig.	GEV No.	cartridge	A (mm)	B (mm)	connection
1	549886	ceramic cartridge ø 40mm	-	-	1/2"
2	549884	ceramic cartridge ø 40mm	200	150	1/2"
2	549387	ceramic cartridge ø 40mm	250	180	1/2"
2	549885	ceramic cartridge ø 40mm	300	225	1/2"

for pedal-operated water taps

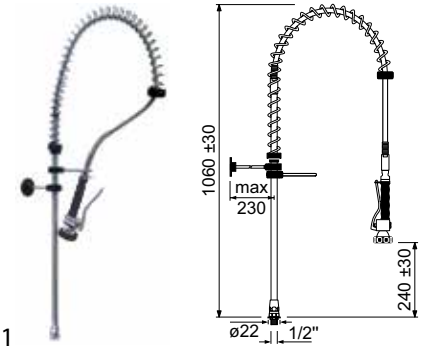

fig.	GEV No.	version	connector
1	547453	with connecting adapter	1/2"

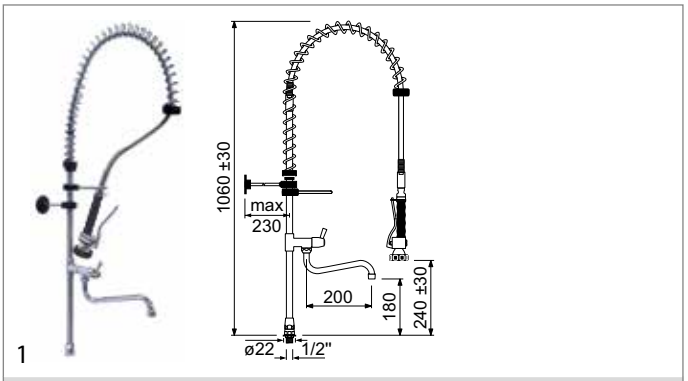

fig.	GEV No.	version	connector
1	547369	with connecting adapter	1/2"

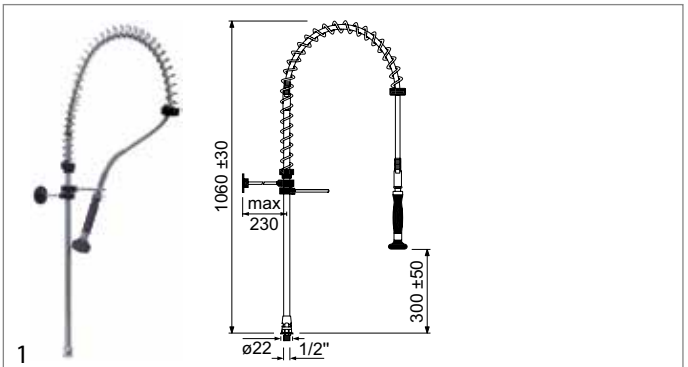

fig.	GEV No.	version	connector
1	547687	with connecting adapter	1/2"

with thermostatic monobloc taps

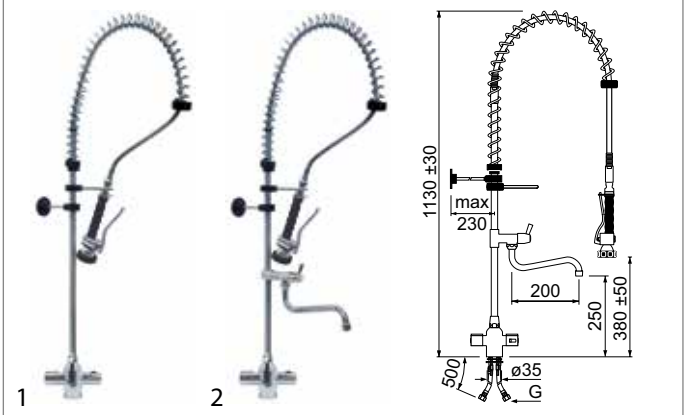

fig.	GEV No.	description	G
1	547361	without swivel tap	3/8"
1	547362	without swivel tap	1/2"
2	547363	with swivel tap	3/8"
2	547364	with swivel tap	1/2"

with two hole thermostatic mixer

1

2

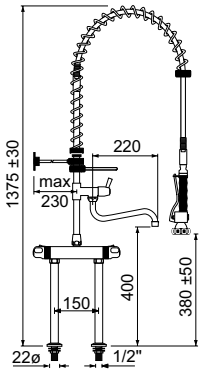

technical data:
hole distance 150mm

fig.	GEV No.	description	connection
1	547365	without swivel tap	1/2"
2	547366	with swivel tap	1/2"

with wall-mounted thermostatic taps

1

2

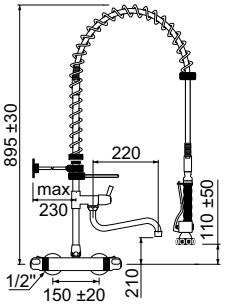

technical data:
hole distance 150±20mm

fig.	GEV No.	description	connection
1	547367	without swivel tap	1/2"
2	547368	with swivel tap	1/2"

rinse assembly without taps

riser pipes short

1

2

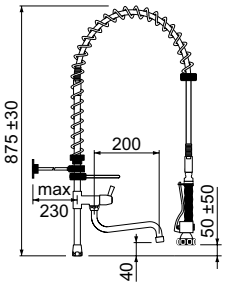

fig.	GEV No.	description
1	547615	short without swivel tap
2	547614	short with swivel tap

riser pipes long

1

2

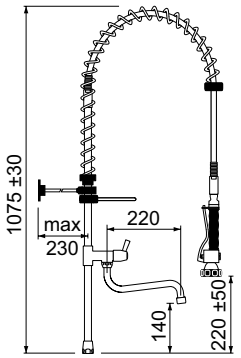

fig.	GEV No.	description
1	547612	long without swivel tap
2	547611	long with swivel tap

pre-rinse units SHORT LINE

with monobloc tap

1

2

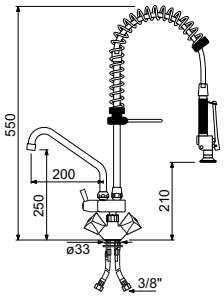

fig.	GEV No.	upper part	overall height (mm)	spout length (mm)	spout height (mm)	connection
1	547889	tap head 1/2"	550	-	-	3/8"
2	547892	tap head 1/2"	550	200	250	3/8"

3

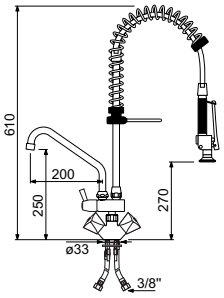

fig.	GEV No.	upper part	overall height (mm)	spout length (mm)	spout height (mm)	connection
3	547891	tap head 1/2"	610	200	250	3/8"

Find the complete and up-to-date range of products in our GEV Webshop

with single lever monobloc tap

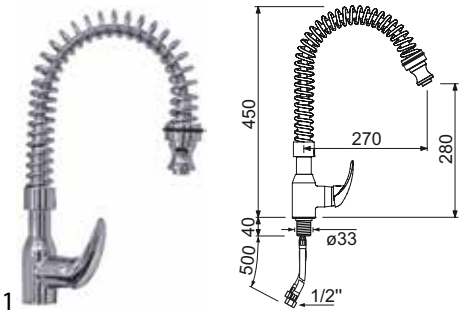

1

fig.	GEV No.	cartridge	overall height (mm)	connection
1	547537	ceramic cartridge ø 35mm	410	1/2”

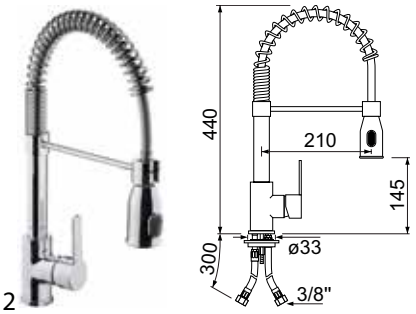

2

fig.	GEV No.	cartridge	overall height (mm)	connection
2	591004	ceramic cartridge ø 35mm	440	3/8”

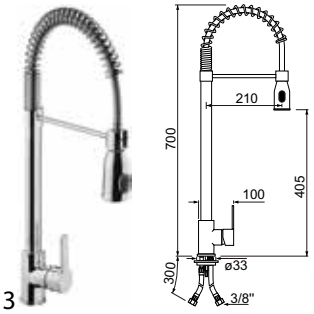

3

fig.	GEV No.	cartridge	overall height (mm)	connection
3	591005	ceramic cartridge ø 35mm	700	3/8”

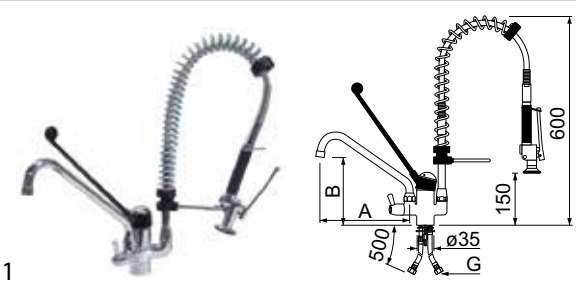

1

technical data:
overall height 600mm

fig.	GEV No.	cartridge	A (mm)	B (mm)	G
1	545080	ceramic cartridge ø 40mm	200	160	3/8”
1	545081	ceramic cartridge ø 40mm	250	190	3/8”
1	545082	ceramic cartridge ø 40mm	300	230	3/8”
1	545083	ceramic cartridge ø 40mm	200	160	1/2”
1	545084	ceramic cartridge ø 40mm	250	190	1/2”
1	545085	ceramic cartridge ø 40mm	300	230	1/2”

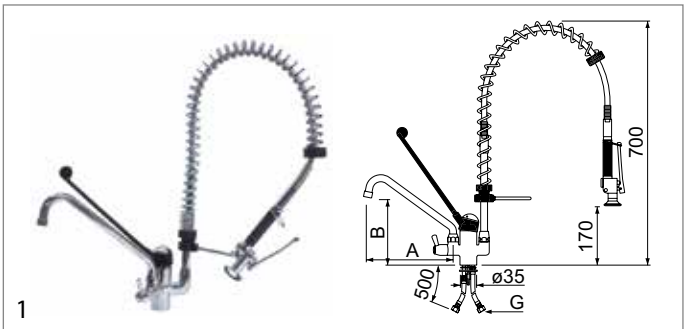

1

technical data:
overall height 700mm

fig.	GEV No.	cartridge	A (mm)	B (mm)	G
1	545086	ceramic cartridge ø 40mm	200	160	3/8”
1	545087	ceramic cartridge ø 40mm	250	190	3/8”
1	545088	ceramic cartridge ø 40mm	300	230	3/8”
1	545089	ceramic cartridge ø 40mm	200	160	1/2”
1	545090	ceramic cartridge ø 40mm	250	190	1/2”
1	545091	ceramic cartridge ø 40mm	300	230	1/2”

spare parts and accessories

1 2

fig.	GEV No.	description	connection
1	548192	spray gun	1/2” ET
2	549383	spray gun	1/2” ET

1

fig.	GEV No.	description	connections	L (mm)
1	542063	shower hose	1/2”	630
1	542014	shower hose	1/2”	850
1	542015	shower hose	1/2”	1000
1	542016	shower hose	1/2”	1100
1	542017	shower hose	1/2”	1200

fig.	GEV No.	description	TS	RA (°)	application
1	548416	tap head	1/2"	-	cold/hot water
2	547554[1]	non-return valve tap head	1/2"	-	cold/hot water

[1]until mid-2014

fig.	GEV No.	description	TS	RA (°)	application
3	548414	ceramic tap head	1/2"	90	cold water
3	548425	ceramic tap head	1/2"	180	cold water
4	548415	ceramic tap head	1/2"	90	hot water
4	548424	ceramic tap head	1/2"	180	hot water

fig.	GEV No.	description	version	application
1	547965	triangular handle	for tap heads 1/2" and 3/4"	cold/hot water
2	548210	lever handle	for tap heads 1/2"	cold/hot water
3	541387	lever handle	for tap heads 1/2"	cold/hot water

fig.	GEV No.	description	D1 ø (mm)	H1 (mm)
1	541197	ceramic cartridge	35	27.4
2	540452	ceramic cartridge	40	30
3	540450	ceramic cartridge	40	43

fig.	GEV No.	description	D1 ø (mm)	H1 (mm)
4	541403	ceramic cartridge	47	30.5

fig.	GEV No.	description	handle length (mm)	intake	ø (mm)	for catridge
1	540451	lever handle	58	10x10,6mm	53	ø40mm
2	548296	lever handle	70	10x10,6mm	60	ø47mm

fig.	GEV No.	description	handle length (mm)	intake	ø (mm)	for catridge
3	547787	lever handle	360	10x10,6mm	54	ø40mm
4	548282	lever handle	375	10x10,6mm	63	ø47mm

fig.	GEV No.	description	projection (mm)	spout height (mm)	tube ø (mm)
1	545070	HU-spout	200	100	20
1	545071	HU-spout	250	130	20
1	545072	HU-spout	300	180	20
2	540196	HU-spout	200	120	-
2	540197	HU-spout	250	190	-

fig.	GEV No.	description	projection (mm)	spout height (mm)	tube ø (mm)
3	547566	S spout	200	120	18
4	540192	HU-spout	250	160	18

fig.	GEV No.	description	TS	version
1	548383	tap aerator	M22x1	with plastic insert
2	548384	tap aerator	M24x1	with plastic insert

Find the complete and up-to-date range of products in our GEV Webshop

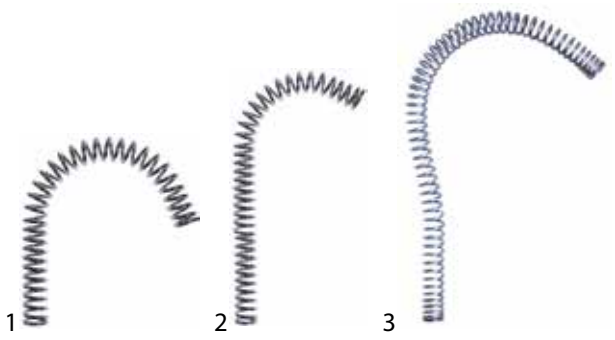

fig.	GEV No.	description	material	H (mm)
1	548288	spring	stainless steel	290
2	548290	spring	stainless steel	410
3	548351	spring	stainless steel	660

fig.	GEV No.	description	connections	L (mm)
1	520466	flex hose	3/8" - M10x1	500
1	520465	flex hose	1/2" - M10x1	500

fig.	GEV No.	description
1	542844	backflow preventer thread 1/2" L 17mm Qty 1 pcs
1	543252	backflow preventer thread 3/4" L 20mm Qty 1 pcs
2	543253	backflow preventer thread 1/2" L 17mm Qty 1 pcs
3	540368	backflow preventer thread 3/8" L 27mm Qty 1 pcs

miscellaneous

fig.	GEV No.	description
1	548198	backflow preventer ø 19mm H 17mm for eccentrics Qty 1 pcs
2	515090	eccentrics connection 1/2" - 3/4" with rosette Qty 2 pcs
3	547702	holder kit length wall holder 49-230mm with hexagon key 2,5mm

fig.	GEV No.	description
4	547704	hose protection
5	547983	swivel tap for pre-rinse units without outlet

PREMIUM PLUS

with pillar tap

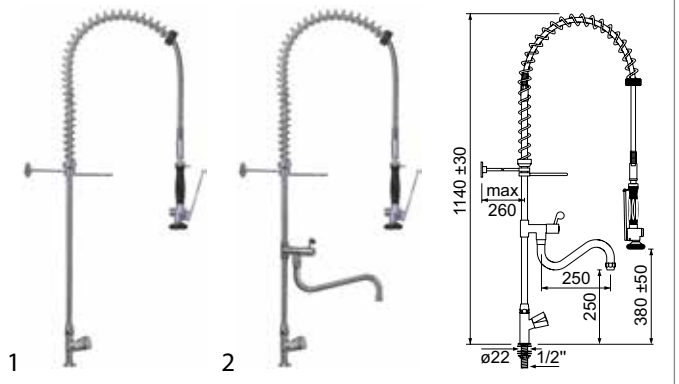

fig.	GEV No.	upper part	handle type	connection
1	591022	tap head 3/4"	hood	1/2"
1	591053	ceramic tap head 3/4"	hood	1/2"
2	591014	tap head 3/4"	hood	1/2"
2	591054	ceramic tap head 3/4"	hood	1/2"

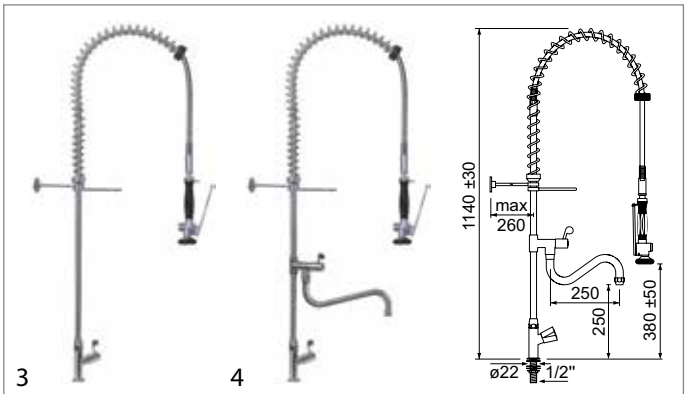

fig.	GEV No.	upper part	handle type	connection
3	591055	ceramic tap head 3/4"	lever	1/2"
4	591056	ceramic tap head 3/4"	lever	1/2"

with monobloc tap

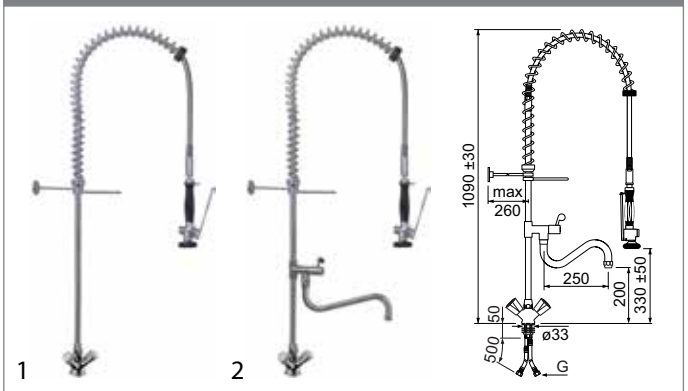

fig.	GEV No.	upper part	handle type	G
1	591016	tap head 1/2"	hood	3/8"
1	591033	tap head 1/2"	hood	1/2"
1	591057	ceramic tap head 1/2"	hood	3/8"
1	591059	ceramic tap head 1/2"	hood	1/2"
2	591001	tap head 1/2"	hood	3/8"
2	591034	tap head 1/2"	hood	1/2"
2	591058	ceramic tap head 1/2"	hood	3/8"
2	591060	ceramic tap head 1/2"	hood	1/2"

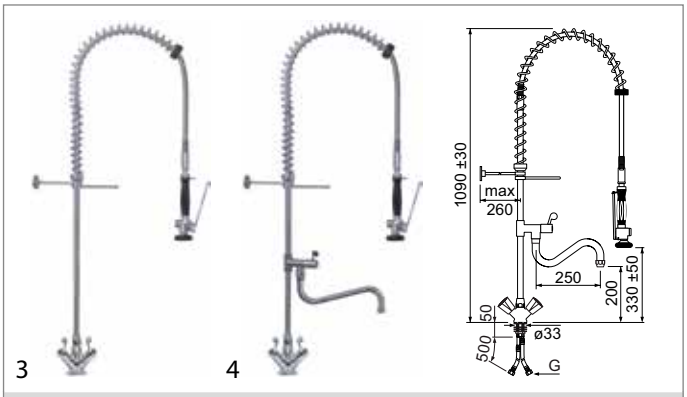

fig.	GEV No.	upper part	handle type	G
3	591061	ceramic tap head 1/2"	lever	3/8"
3	591063	ceramic tap head 1/2"	lever	1/2"
4	591062	ceramic tap head 1/2"	lever	3/8"
4	591064	ceramic tap head 1/2"		1/2"

with bridge mixer tap

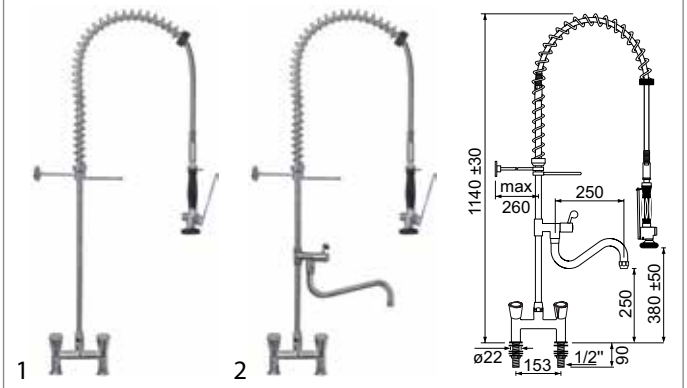

fig.	GEV No.	upper part	handle type	HD (mm)	connection
1	591015	tap head 3/4"	hood	153	1/2"
1	591065	ceramic tap head 3/4"	hood	153	1/2"
2	591000	tap head 3/4"	hood	153	1/2"
2	591067	ceramic tap head 3/4"	hood	155	1/2"

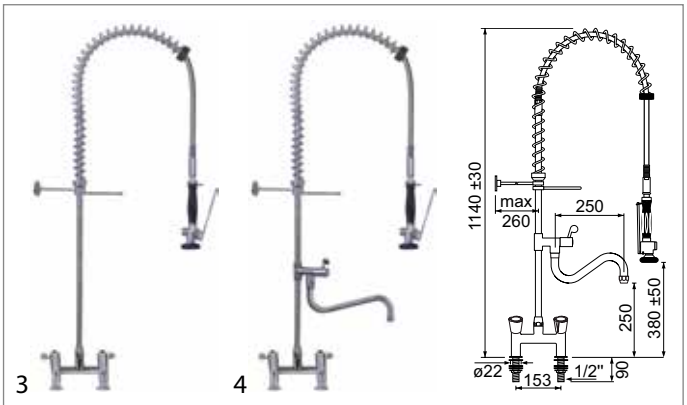

fig.	GEV No.	upper part	handle type	HD (mm)	connection
3	591066	ceramic tap head 3/4"	lever	153	1/2"
4	591068	ceramic tap head 3/4"	lever	153	1/2"

Find the complete and up-to-date range of products in our GEV Webshop

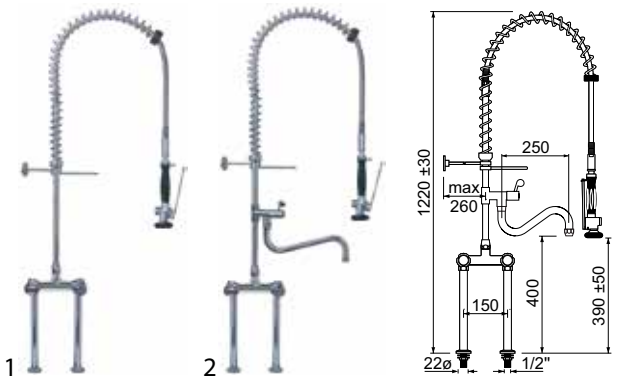

technical data:
hole distance 150mm

fig.	GEV No.	upper part	handle type	connection
1	591035	tap head 3/4"	hood	1/2"
1	591069	ceramic tap head 3/4"	hood	1/2"
2	591036	tap head 1/2"	hood	1/2"
2	591071	ceramic tap head 3/4"	hood	1/2"

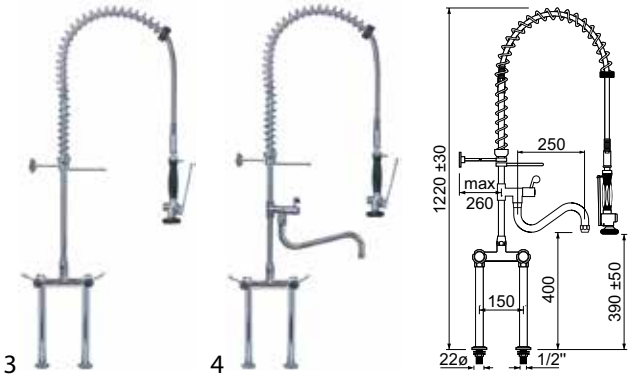

technical data:
hole distance 150mm

fig.	GEV No.	upper part	handle type	connection
3	591070	ceramic tap head 3/4"	lever	1/2"
4	591072	ceramic tap head 3/4"	lever	1/2"

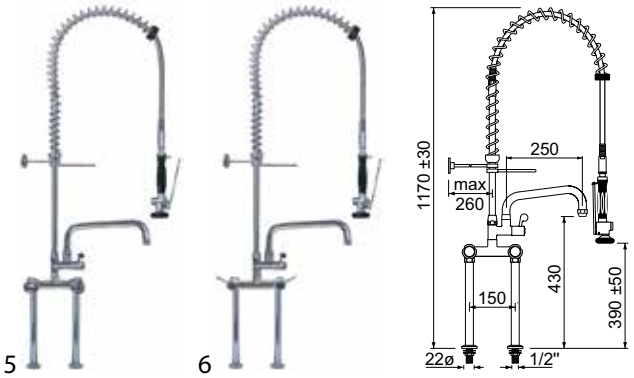

technical data:
hole distance 150mm

fig.	GEV No.	upper part	handle type	connection
5	591037	tap head 3/4"	hood	1/2"
5	591073	ceramic tap head 3/4"	hood	1/2"
6	591074	ceramic tap head 3/4"	lever	1/2"

with wall-mounted water tap

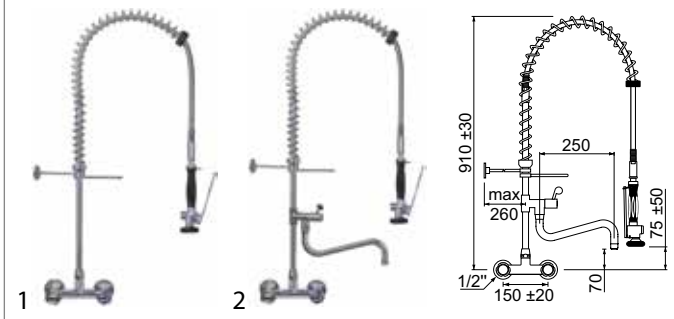

technical data:
hole distance 150±20mm

fig.	GEV No.	upper part	handle type	connection
1	591018	tap head 3/4"	hood	1/2"
1	591075	ceramic tap head 3/4"	hood	1/2"
2	591003	tap head 3/4"	hood	1/2"
2	591077	ceramic tap head 3/4"	hood	1/2"

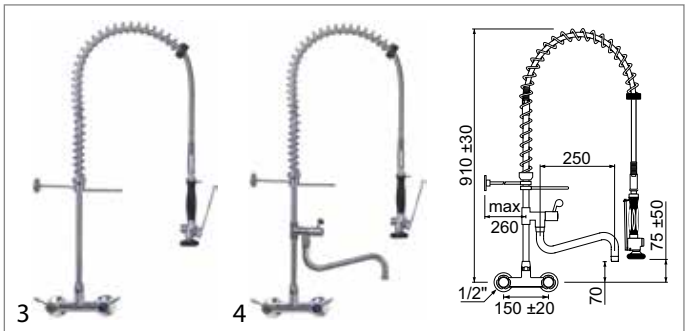

technical data:
hole distance 150±20mm

fig.	GEV No.	upper part	handle type	connection
3	591076	ceramic tap head 3/4"	lever	1/2"
4	591078	ceramic tap head 3/4"	lever	1/2"

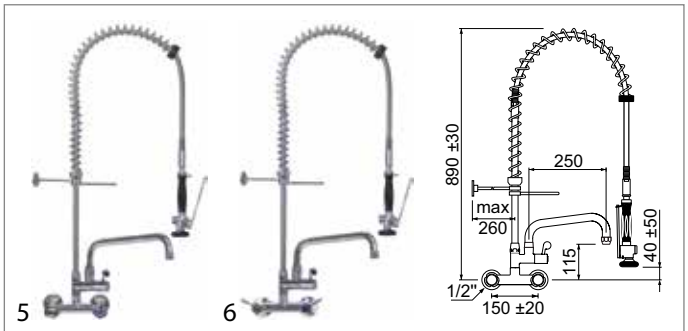

technical data:
hole distance 150±20mm

fig.	GEV No.	upper part	handle type	connection
5	591038	tap head 3/4"	hood	1/2"
5	591079	ceramic tap head 3/4"	hood	1/2"
6	591080	ceramic tap head 3/4"	lever	1/2"

with single lever monobloc tap

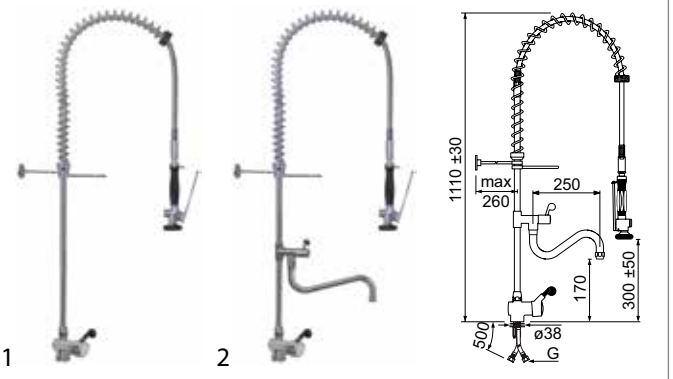

1 2

fig.	GEV No.	cartridge	G
1	591017	ceramic cartridge ø 40mm	3/8”
1	591039	ceramic cartridge ø 40mm	1/2”
2	591002	ceramic cartridge ø 40mm	3/8”
2	591040	ceramic cartridge ø 40mm	1/2”

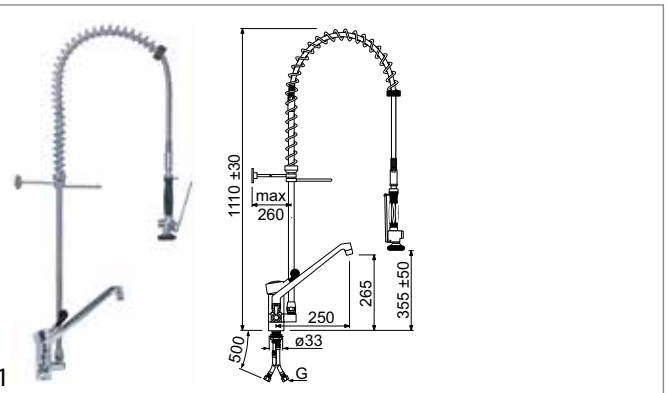

1

fig.	GEV No.	cartridge	G
1	547341	ceramic cartridge ø 47mm	3/8”
1	547342	ceramic cartridge ø 47mm	1/2”

with single lever bridge mixer tap

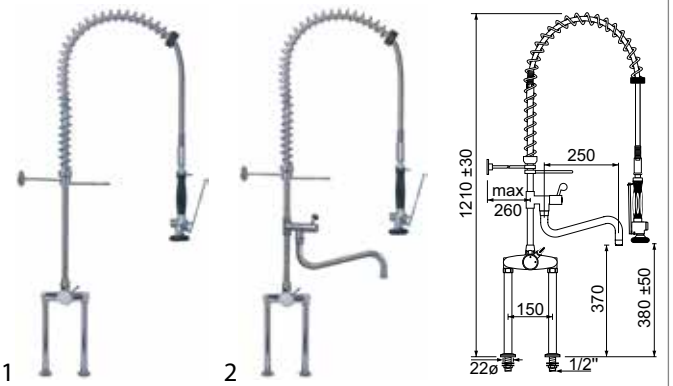

1 2

technical data:
hole distance 150mm

fig.	GEV No.	cartridge	connection
1	547213	ceramic cartridge ø 40mm	1/2”
2	547214	ceramic cartridge ø 40mm	1/2”

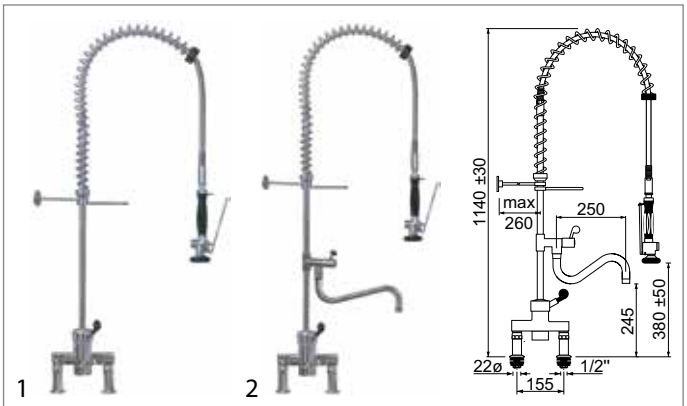

1 2

technical data:
hole distance 155mm

fig.	GEV No.	cartridge	connection
1	591024	ceramic cartridge ø 47mm	1/2”
2	591023	ceramic cartridge ø 47mm	1/2”

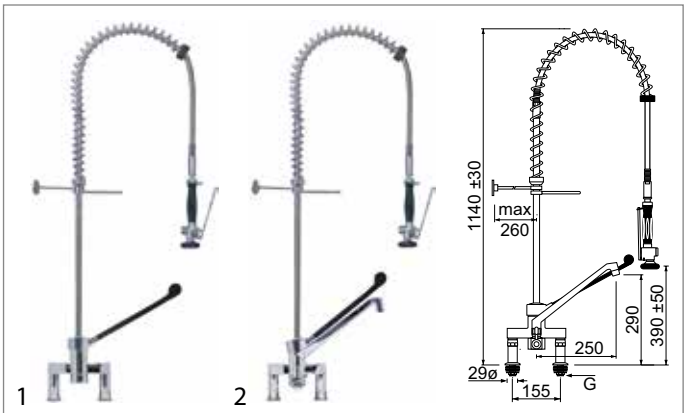

1 2

technical data:
hole distance 155mm

fig.	GEV No.	cartridge	spout length (mm)	spout height (mm)	connection
1	547345	ceramic cartridge ø 47mm	-	-	1/2”
1	547346	ceramic cartridge ø 47mm	-	-	3/4”
2	547349	ceramic cartridge ø 47mm	250	290	1/2”
2	547354	ceramic cartridge ø 47mm	250	290	3/4”

with single lever wall-mounted water tap

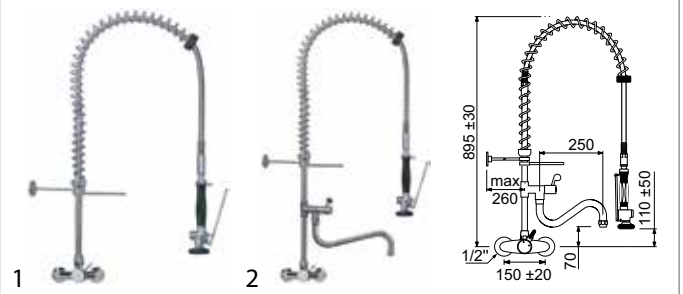

1 2

technical data:
hole distance 150±20mm

fig.	GEV No.	cartridge	connection
1	591026	ceramic cartridge ø 40mm	1/2”
2	591025	ceramic cartridge ø 40mm	1/2”

Find the complete and up-to-date range of products in our GEV Webshop

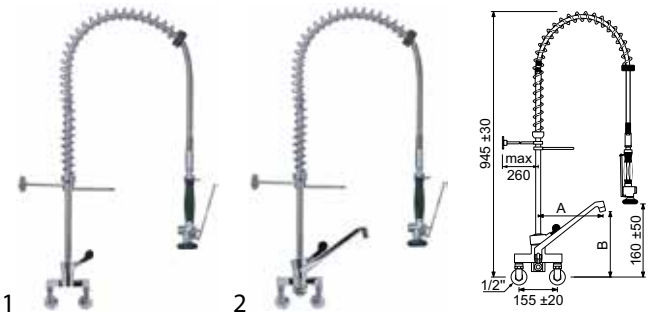

technical data:
hole distance 155±20mm

fig.	GEV No.	cartridge	A (mm)	B (mm)	connection
1	547355	ceramic cartridge ø 47mm	-	-	1/2"
2	547357	ceramic cartridge ø 47mm	200	210	1/2"
2	547358	ceramic cartridge ø 47mm	250	260	1/2"

technical data:
hole distance 155±20mm

fig.	GEV No.	cartridge	A (mm)	B (mm)	connection
1	547356	ceramic cartridge ø 47mm	-	-	1/2"
2	547359	ceramic cartridge ø 47mm	200	210	1/2"
2	547360	ceramic cartridge ø 47mm	250	260	1/2"

for pedal-operated water taps

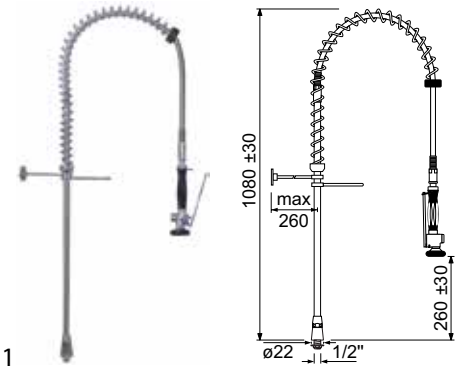

fig.	GEV No.	version	connector
1	547324	with connecting adapter	1/2"

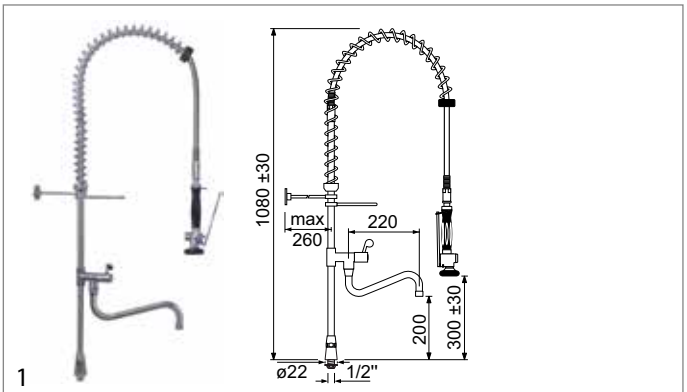

fig.	GEV No.	version	connector
1	547325	with connecting adapter	1/2"

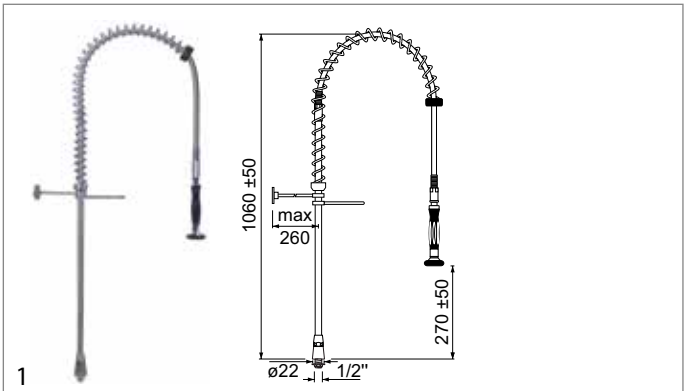

fig.	GEV No.	version	connector
1	547728	with connecting adapter	1/2"

with thermostatic monobloc taps

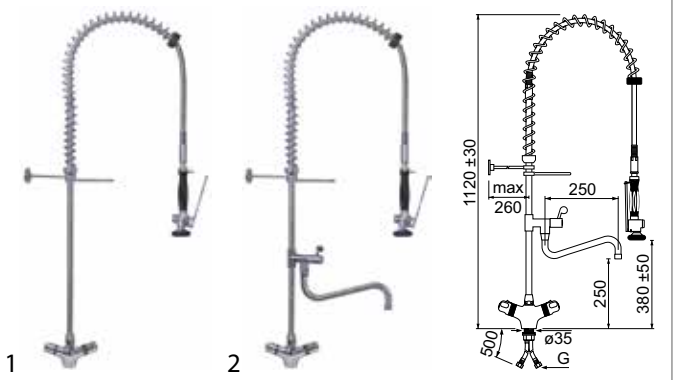

fig.	GEV No.	description	G
1	547327	without swivel tap	3/8"
1	547328	without swivel tap	1/2"
2	547329	with swivel tap	3/8"
2	547337	with swivel tap	1/2"

with two hole thermostatic mixer

1

2

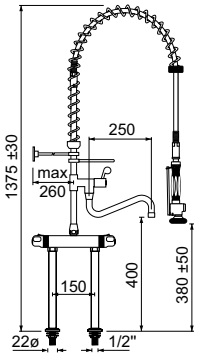

technical data:
hole distance 150mm

fig.	GEV No.	description	connection
1	547339	without swivel tap	1/2"
2	547340	with swivel tap	1/2"

with wall-mounted thermostatic taps

1

2

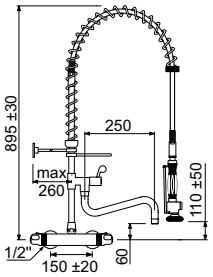

technical data:
hole distance 150±20mm

fig.	GEV No.	description	connection
1	547326	without swivel tap	1/2"
2	547338	with swivel tap	1/2"

pre-rinse units SHORT LINE

1

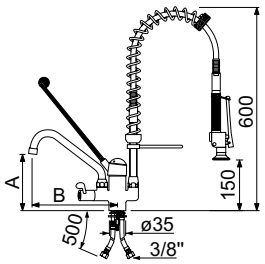

technical data:
overall height 600mm

fig.	GEV No.	cartridge	A (mm)	B (mm)	connection
1	591027	ceramic cartridge ø 40mm	250	190	3/8"
1	591028	ceramic cartridge ø 40mm	300	200	3/8"

1

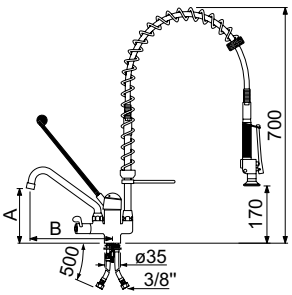

technical data:
overall height 700mm

fig.	GEV No.	cartridge	A (mm)	B (mm)	connection
1	591029	ceramic cartridge ø 40mm	250	190	3/8"
1	591030	ceramic cartridge ø 40mm	300	200	3/8"

spare parts and accessories

1

2

fig.	GEV No.	description	connection
1	542998	spray gun	1/2" ET
2	549383	spray gun	1/2" ET

1

fig.	GEV No.	description	connections	L (mm)
1	592222[1]	shower hose	1/2"	630
1	540292[1]	shower hose	1/2"	875
1	540066[1]	shower hose	1/2"	1000
1	541812[1]	shower hose	1/2"	1075
1	540070[1]	shower hose	1/2"	1250

[1]brass bush

1

2

fig.	GEV No.	description	TS	RA (°)	application
1	548416	tap head	1/2"	-	cold/hot water
1	548437	tap head	3/4"	-	cold/hot water
2	548414	ceramic tap head	1/2"	90	cold water
2	548425	ceramic tap head	1/2"	180	cold water
2	548434	ceramic tap head	3/4"	90	cold water
2	548436	ceramic tap head	3/4"	180	cold water

Table continues overleaf

Find the complete and up-to-date range of products in our GEV Webshop

3

fig.	GEV No.	description	TS	RA (°)	application
3	548415	ceramic tap head	1/2"	90	hot water
3	548424	ceramic tap head	1/2"	180	hot water
3	548433	ceramic tap head	3/4"	90	hot water
3	548435	ceramic tap head	3/4"	180	hot water

1 2 3 4

fig.	GEV No.	description	version	application
1	592180	hood handle	for tap heads 1/2" and 3/4"	cold water
2	592181	hood handle	for tap heads 1/2" and 3/4"	hot water
3	547965	triangular handle	for tap heads 1/2" and 3/4"	cold/hot water
4	548334	lever handle	for tap heads 1/2"	cold/hot water
4	548348	lever handle	for tap heads 3/4"	cold/hot water

1 2 3

fig.	GEV No.	description	D1 ø (mm)	H1 (mm)
1	540452	ceramic cartridge	40	30
2	540450	ceramic cartridge	40	43
3	541403	ceramic cartridge	47	30.5

1 2

fig.	GEV No.	description	handle length (mm)	ø (mm)	intake	for catridge
1	547071	lever handle	71	54	10x10,6mm	ø40mm
2	548047	lever handle	71	64	10x10,6mm	ø47mm

3 4

fig.	GEV No.	description	handle length (mm)	ø (mm)	intake	for catridge
3	546047	lever handle	350	54	10x10,6mm	ø40mm
4	548282	lever handle	375	63	10x10,6mm	ø47mm

1 2

fig.	GEV No.	description	tube ø (mm)	projection (mm)	spout height (mm)
1	548369	S spout	20	220	80
2	592217	S spout	24	250	115

3 4

fig.	GEV No.	description	tube ø (mm)	projection (mm)	spout height (mm)
3	592219	S spout	24	250	115
4	592218	U spout	24	250	20

5 6

fig.	GEV No.	description	tube ø (mm)	projection (mm)	spout height (mm)
5	548375	U spout	25	250	104
6	545071	HU-spout	20	250	130
6	545072	HU-spout	20	300	180

1 2

fig.	GEV No.	description	TS	version
1	548383	tap aerator	M22x1	with plastic insert
2	548384	tap aerator	M24x1	with plastic insert

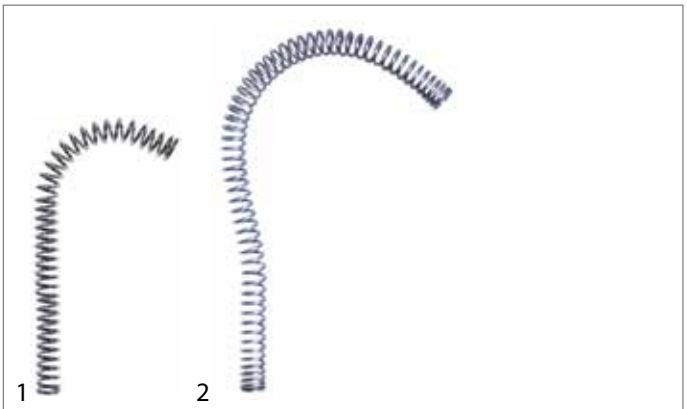
1 2

fig.	GEV No.	description	material	H (mm)
1	548290	spring	stainless steel	410
2	548351	spring	stainless steel	660

fig.	GEV No.	description	connections	L (mm)
1	520466	flex hose	3/8" - M10x1	500
1	520465	flex hose	1/2" - M10x1	500

fig.	GEV No.	description	connections	L (mm)
2	592154	flex hose	1/2" - M14x1	500
2	592155	flex hose	1/2" - M14x1	600
2	592156	flex hose	1/2" - M14x1	800
2	520392	flex hose	3/4" - 3/8"	700
2	520393	flex hose	3/4" - 3/8"	1000

fig.	GEV No.	description
1	540368	backflow preventer thread 3/8" L 27mm Qty 1 pcs
2	543253	backflow preventer thread 1/2" L 17mm Qty 1 pcs
3	542844	backflow preventer thread 1/2" L 17mm Qty 1 pcs
3	543252	backflow preventer thread 3/4" L 20mm Qty 1 pcs
4	547984	backflow preventer ø 20mm H 20mm Qty 1 pcs

fig.	GEV No.	description
1	548355	bracket for spray gun ø 20,5mm
2	548354	spring holder ø 20,5mm for stand pipe
3	548356	wall holder L 250mm for standpipe ø20.5mm

miscellaneous

fig.	GEV No.	description
1	548198	backflow preventer ø 19mm H 17mm for eccentrics Qty 1 pcs
2	515090	eccentrics connection 1/2" - 3/4" with rosette Qty 2 pcs
2	515019	eccentrics connection 3/4" - 3/4" with rosette Qty 2 pcs
3	547704	hose protection

PREMIUM PLUS AUTOMATIC

with pillar tap

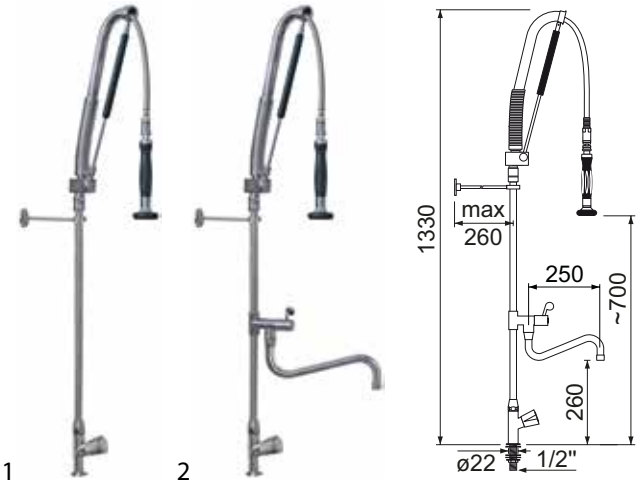

fig.	GEV No.	upper part	connection
1	591041	tap head 3/4"	1/2"
2	591042	tap head 3/4"	1/2"

with monobloc tap

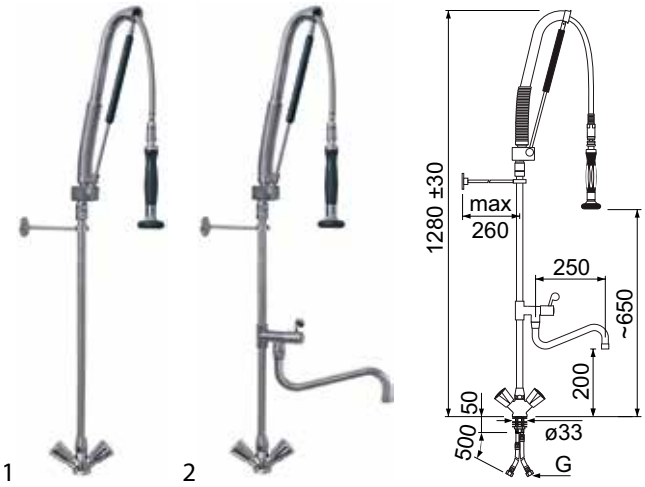

fig.	GEV No.	upper part	G
1	591019	tap head 1/2"	3/8"
1	591044	tap head 1/2"	1/2"
2	591011	tap head 1/2"	3/8"
2	591043	tap head 1/2"	1/2"

with bridge mixer tap

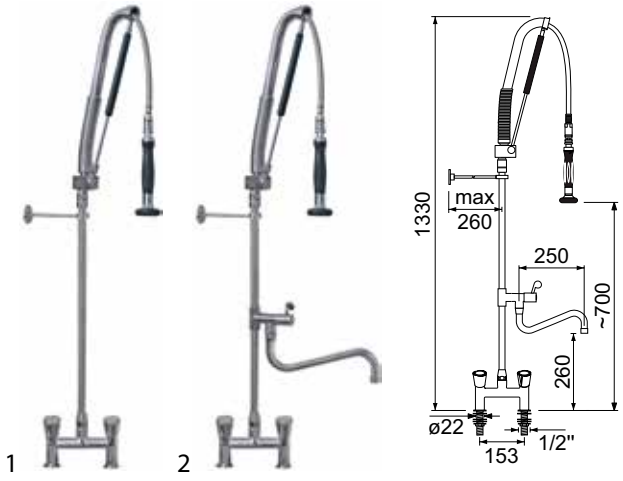

technical data:
hole distance 153mm

fig.	GEV No.	upper part	connection
1	591020	tap head 3/4"	1/2"
2	591012	tap head 3/4"	1/2"

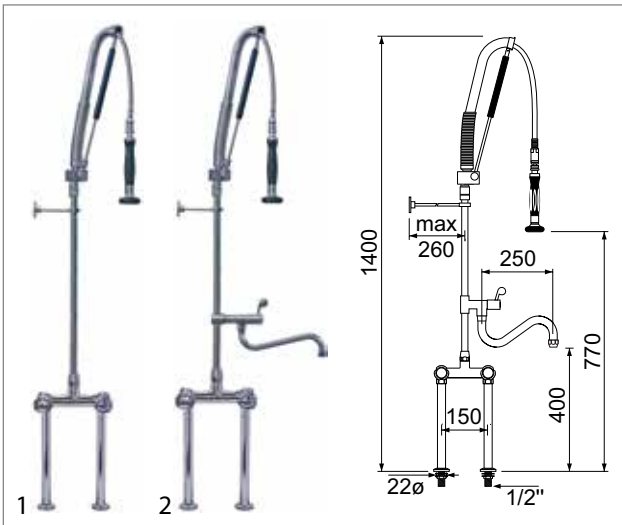

technical data:
hole distance 150mm

fig.	GEV No.	upper part	connection
1	591050	tap head 3/4"	1/2"
2	591048	tap head 3/4"	1/2"

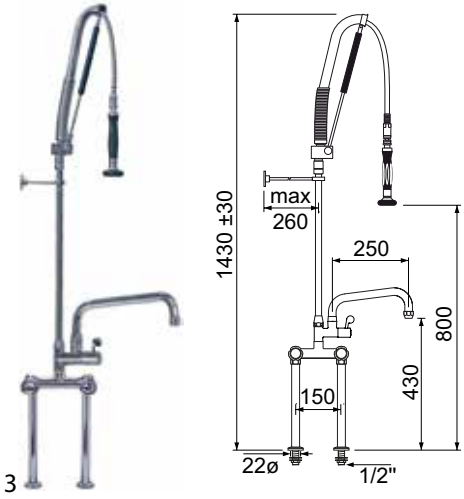

technical data:
hole distance 150mm

fig.	GEV No.	upper part	connection
3	591049	tap head 3/4"	1/2"

with wall-mounted water tap

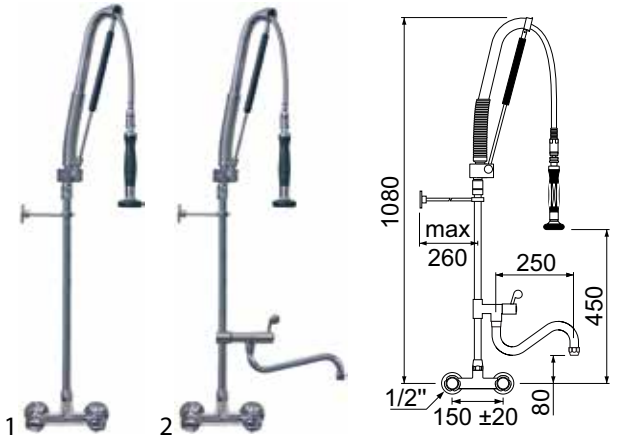

technical data:
hole distance 150±20mm

fig.	GEV No.	upper part	connection
1	591045	tap head 3/4"	1/2"
2	591046	tap head 3/4"	1/2"

technical data:
hole distance 150±20mm

fig.	GEV No.	upper part	connection
3	591047	tap head 3/4"	1/2"

with single lever monobloc tap

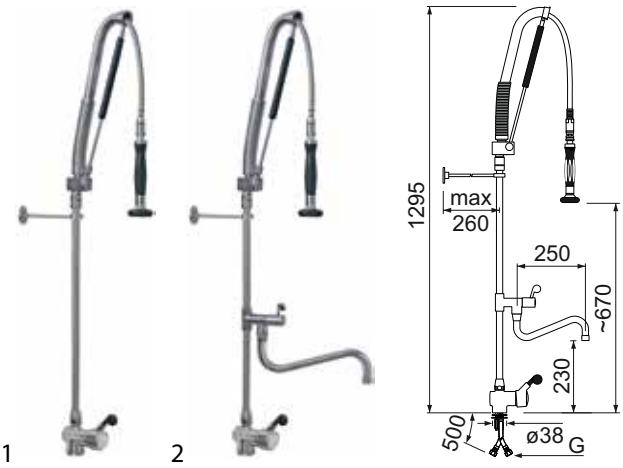

fig.	GEV No.	cartridge	G
1	591021	ceramic cartridge ø 40mm	3/8"
1	591051	ceramic cartridge ø 40mm	1/2"
2	591052	ceramic cartridge ø 40mm	1/2"
2	591013	ceramic cartridge ø 40mm	3/8"

with single lever bridge mixer tap

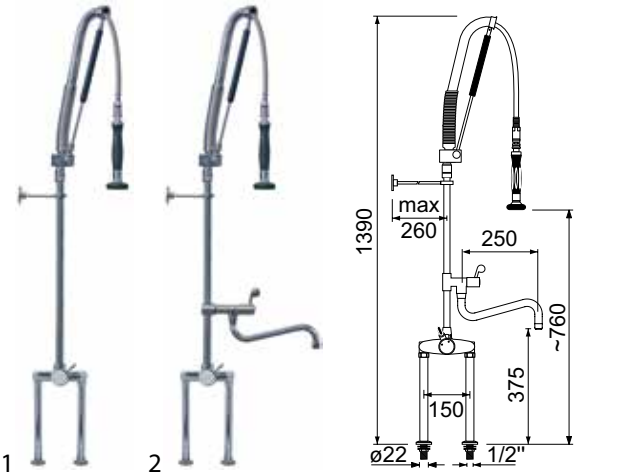

technical data:
hole distance 150mm

fig.	GEV No.	cartridge	connection
1	545684	ceramic cartridge ø 40mm	1/2"
2	545685	ceramic cartridge ø 40mm	1/2"

Find the complete and up-to-date range of products in our GEV Webshop

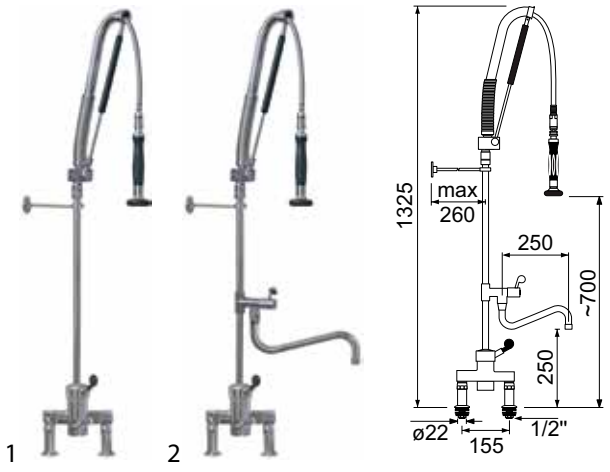

technical data:
hole distance 155mm

fig.	GEV No.	cartridge	connection
1	591032	ceramic cartridge ø 47mm	1/2"
2	591031	ceramic cartridge ø 47mm	1/2"

with single lever wall-mounted water tap

technical data:
hole distance 150±20mm

fig.	GEV No.	cartridge	connection
1	545686	ceramic cartridge ø 40mm	1/2"
2	545687	ceramic cartridge ø 40mm	1/2"

with thermostatic monobloc taps

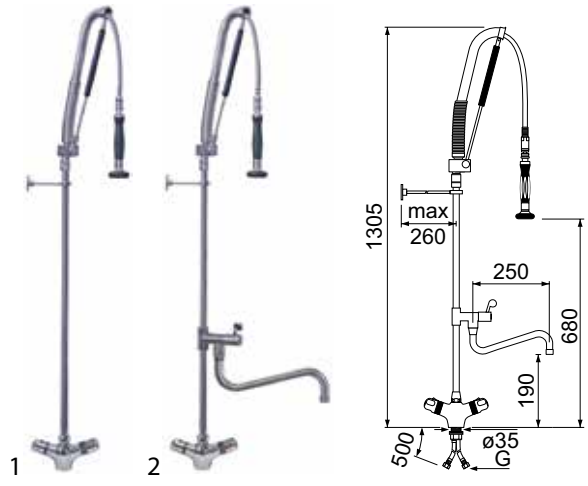

fig.	GEV No.	description	connection
1	545692	without swivel tap	3/8"
1	545609	without swivel tap	1/2"
2	545693	with swivel tap	3/8"
2	545610	with swivel tap	1/2"

with wall-mounted thermostatic taps

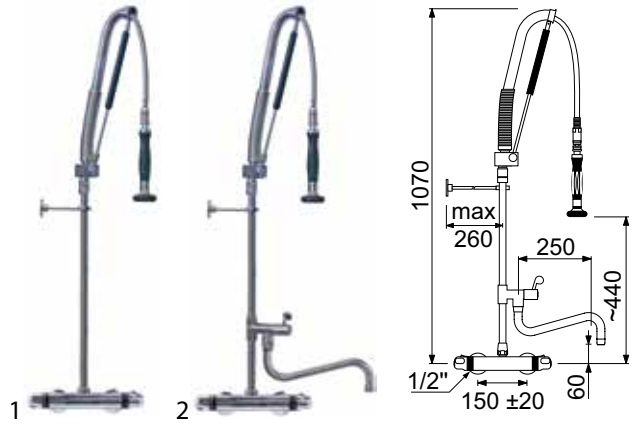

technical data:
hole distance 150±20mm

fig.	GEV No.	description	connection
1	545690	without swivel tap	1/2"
2	545691	with swivel tap	1/2"

with two hole thermostatic mixer

technical data:
hole distance 150mm

fig.	GEV No.	description	connection
1	545688	without swivel tap	1/2"
2	545689	with swivel tap	1/2"

spare parts and accessories

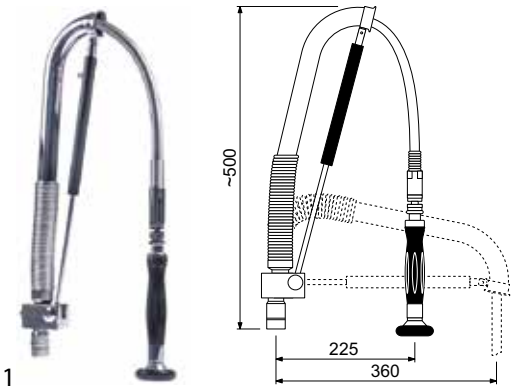

fig.	GEV No.	description
1	545608	pre-rinse unit attachment for PREMIUM PLUS AUTOMATIC

fig.	GEV No.	description
1	545046	gas tension spring AUTOMATIC LINE L 410mm ø 19mm

fig.	GEV No.	description
2	549293	spring for pre-rinse unit type automatic chrome-plated brass

fig.	GEV No.	description	connection
1	548011	spray gun	1/2" ET

fig.	GEV No.	description	connections	L (mm)
1	540292[1]	shower hose	1/2"	875

[1]brass bush

fig.	GEV No.	description	TS	RA (°)	application
1	548416	tap head	1/2"	-	cold/hot water
1	548437	tap head	3/4"	-	cold/hot water
2	548414	ceramic tap head	1/2"	90	cold water
2	548425	ceramic tap head	1/2"	180	cold water
2	548434	ceramic tap head	3/4"	90	cold water
2	548436	ceramic tap head	3/4"	180	cold water
3	548415	ceramic tap head	1/2"	90	hot water
3	548424	ceramic tap head	1/2"	180	hot water
3	548433	ceramic tap head	3/4"	90	hot water
3	548435	ceramic tap head	3/4"	180	hot water

fig.	GEV No.	description	version	application
1	592180	hood handle	for tap heads 1/2" and 3/4"	cold water
2	592181	hood handle	for tap heads 1/2" and 3/4"	hot water
3	547965	triangular handle	for tap heads 1/2" and 3/4"	cold/hot water
4	548334	lever handle	for tap heads 1/2"	cold/hot water
4	548348	lever handle	for tap heads 3/4"	cold/hot water

Find the complete and up-to-date range of products in our GEV Webshop

fig.	GEV No.	description	D1 ø (mm)	H1 (mm)
1	540452	ceramic cartridge	40	30
2	540450	ceramic cartridge	40	43
3	541403	ceramic cartridge	47	30.5

fig.	GEV No.	description	handle length (mm)	ø (mm)	intake	for catridge
1	547071	lever handle	71	54	10x10,6mm	ø40mm
2	548047	lever handle	71	64	10x10,6mm	ø47mm

fig.	GEV No.	description	tube ø (mm)	projection (mm)	spout height (mm)
1	548369	S spout	20	220	80
2	592219	S spout	24	250	115

fig.	GEV No.	description	tube ø (mm)	projection (mm)	spout height (mm)
3	548375	U spout	25	250	104

fig.	GEV No.	description	connections	L (mm)
1	520466	flex hose	3/8" - M10x1	500
1	520465	flex hose	1/2" - M10x1	500

fig.	GEV No.	description
1	542844	backflow preventer thread 1/2" L 17mm Qty 1 pcs
2	543253	backflow preventer thread 1/2" L 17mm Qty 1 pcs
3	540368	backflow preventer thread 3/8" L 27mm Qty 1 pcs

fig.	GEV No.	description
1	548353	swivel joint IT 1/2" ET 1/2" brass
2	549291	valve for pre-rinse units type automatic chrome-plated brass
3	548356	wall holder L 250mm for standpipe ø20.5mm

PREMIUM ABSOLUTE

rinse assembly without taps

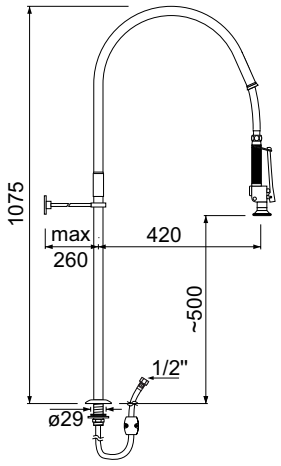

1

fig.	GEV No.	version	connection
1	549290	with extendable rinsing hose	1/2"

with monobloc tap

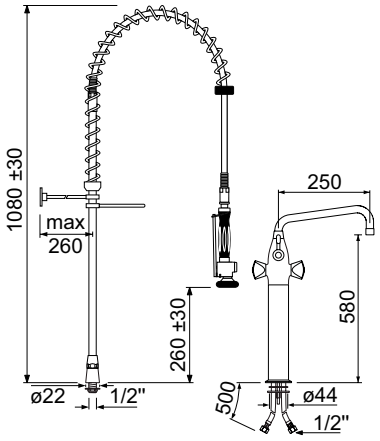

1

fig.	GEV No.	version	upper part	connection
1	545502	with monobloc tap	tap head 1/2"	1/2"

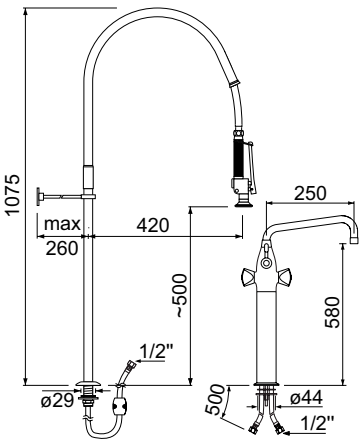

2

fig.	GEV No.	version	upper part	connection
2	545526	with monobloc tap	tap head 1/2"	1/2"

monobloc taps

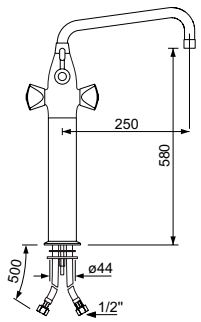

1

fig.	GEV No.	upper part	A (mm)	B (mm)
1	545529	tap head 1/2"	250	580

1 2

fig.	GEV No.	description	connection
1	542998	spray gun	1/2" ET
2	549383	spray gun	1/2" ET

1

fig.	GEV No.	description	connections	L (mm)
1	540066[1]	shower hose	1/2"	1000

[1]brass bush

2

fig.	GEV No.	description	connections	L (mm)
2	549280	shower hose	1/2"	3000

1 2 3

fig.	GEV No.	description	TS	RA (°)	application
1	548416	tap head	1/2"	-	cold/hot water
2	548415	ceramic tap head	1/2"	90	hot water
3	547965	triangular handle	-	-	cold/hot water

Find the complete and up-to-date range of products in our GEV Webshop

fig.	GEV No.	description	tube ø (mm)	projection (mm)	spout height (mm)
1	548375	U spout	25	250	104

fig.	GEV No.	description	material	H (mm)
1	548351	spring	stainless steel	660

fig.	GEV No.	description	connections	L (mm)
1	520102	flex hose	1/2" - M10x1	500

fig.	GEV No.	description	connections	L (mm)
2	520472	flex hose	1/2" - M10x1	800

fig.	GEV No.	description
1	543253	backflow preventer thread 1/2" L 17mm Qty 1 pcs

fig.	GEV No.	description
1	548355	bracket for spray gun ø 20,5mm
2	548356	wall holder L 250mm for standpipe ø20.5mm
2	545527	wall holder L 250mm for standpipe ø25mm

fig.	GEV No.	description
1	547704	hose protection
2	548493	hose weight for spraying hose
3	548354	spring holder ø 20,5mm for stand pipe

INOX

with monobloc tap

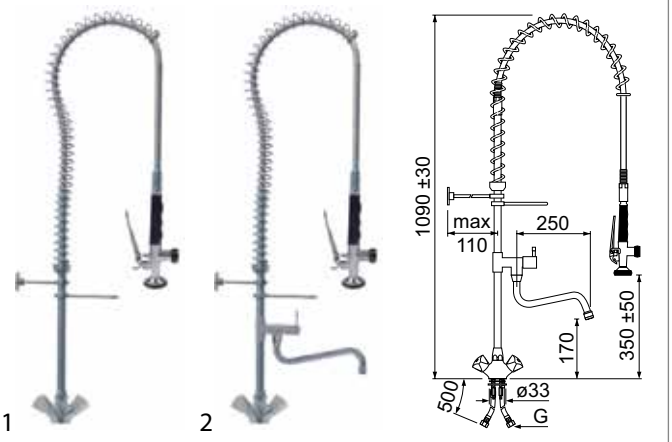

fig.	GEV No.	upper part	G
1	546021	tap head 1/2”	3/8”
1	546022	tap head 1/2”	1/2”
1	549783	ceramic tap head 1/2”	3/8”
1	549784	ceramic tap head 1/2”	1/2”
2	546019	tap head 1/2”	3/8”
2	546020	tap head 1/2”	1/2”
2	549781	ceramic tap head 1/2”	3/8”
2	549782	ceramic tap head 1/2”	1/2”

with bridge mixer tap

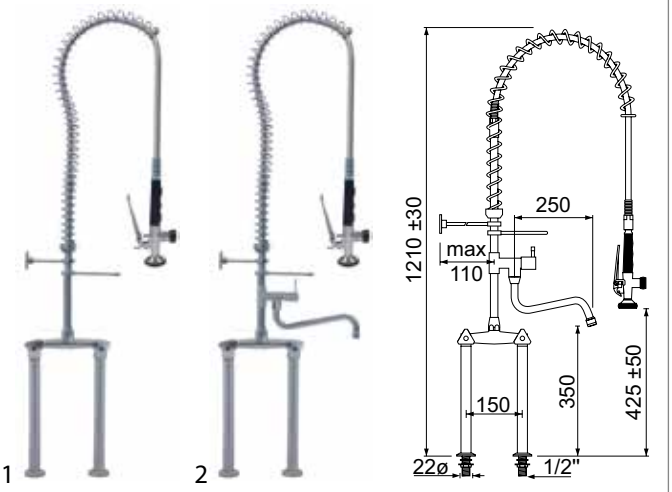

technical data:
hole distance 150mm

fig.	GEV No.	upper part	connection
1	546026	tap head 1/2”	1/2”
1	549791	ceramic tap head 1/2”	1/2”
2	546025	tap head 1/2”	1/2”
2	549790	ceramic tap head 1/2”	1/2”

with wall-mounted water tap

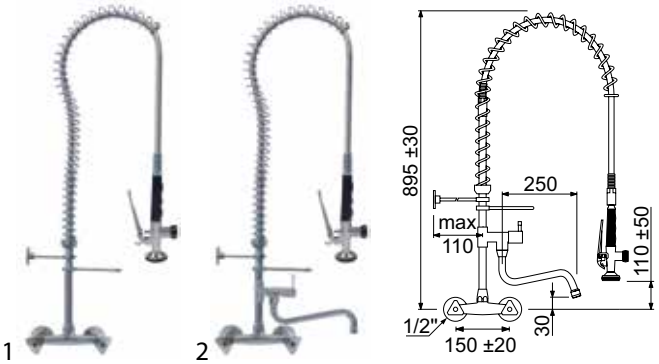

technical data:
hole distance 150±20mm

fig.	GEV No.	upper part	connection
1	546018	tap head 1/2”	1/2”
1	549779	ceramic tap head 1/2”	1/2”
2	546017	tap head 1/2”	1/2”
2	549787	ceramic tap head 1/2”	1/2”

with single lever monobloc tap

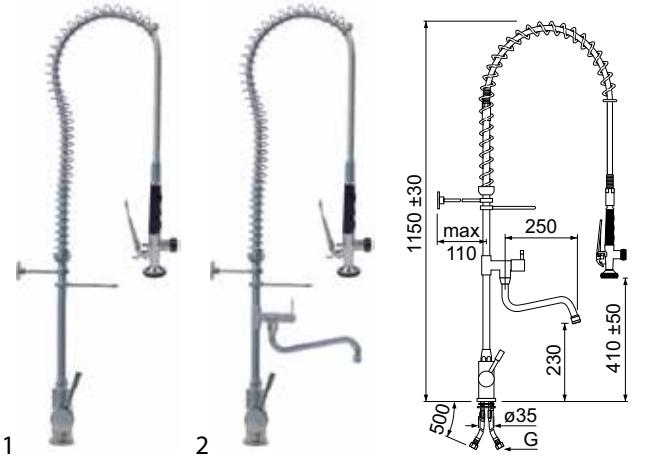

fig.	GEV No.	cartridge	G
1	549785	ceramic cartridge ø 35mm	3/8”
1	549786	ceramic cartridge ø 35mm	1/2”
2	549778	ceramic cartridge ø 35mm	3/8”
2	549780	ceramic cartridge ø 35mm	1/2”

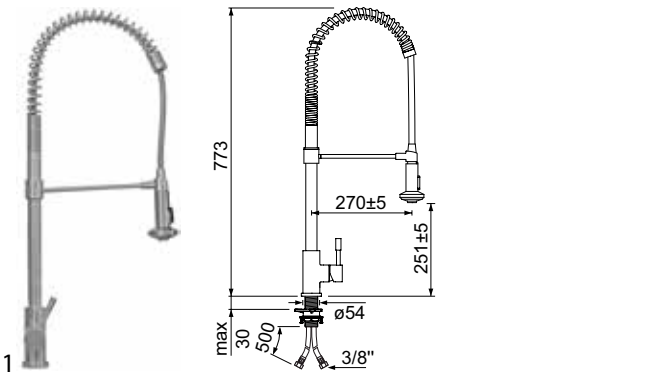

fig.	GEV No.	cartridge	connection
1	546200	ceramic cartridge ø 35mm	3/8”

Find the complete and up-to-date range of products in our GEV Webshop

with single lever bridge mixer tap

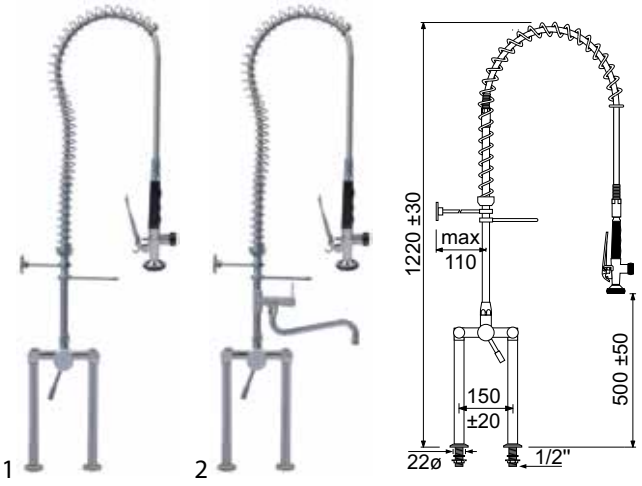

technical data:
hole distance 150±20mm

fig.	GEV No.	cartridge	connection
1	546024	ceramic cartridge ø 35mm	1/2"
2	546023	ceramic cartridge ø 35mm	1/2"

with single lever wall-mounted water tap

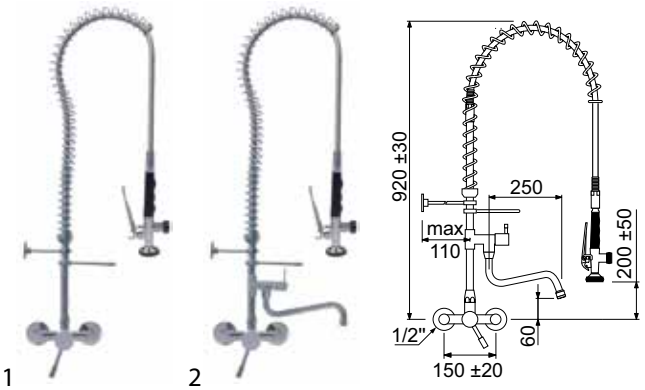

technical data:
hole distance 150±20mm

fig.	GEV No.	cartridge	connection
1	546015	ceramic cartridge ø 35mm	1/2"
2	546016	ceramic cartridge ø 35mm	1/2"

spare parts and accessories

fig.	GEV No.	description	connection
1	549497	spray gun	1/2" ET
2	546262	spray gun	1/2" ET

fig.	GEV No.	description	connections	L (mm)
1	542119[1]	shower hose	1/2"	875
1	549485[1]	shower hose	1/2"	1000
1	542120[1]	shower hose	1/2"	1075
1	549244[1]	shower hose	1/2"	1250

[1]stainless steel bush

fig.	GEV No.	description	connections	L (mm)
2	546264	shower hose	M12x1	850

fig.	GEV No.	description	TS	RA (°)	application
1	546008	tap head	1/2"	-	cold/hot water
2	549921	ceramic tap head	1/2"	90	cold water
3	549931	ceramic tap head	1/2"	90	hot water

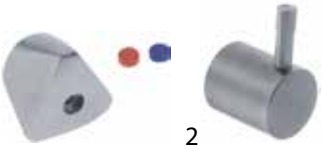

fig.	GEV No.	description	version	application
1	549974	triangular handle	for tap heads 1/2"	cold/hot water
2	549491	lever handle	for tap heads 1/2"	for changeover valve

fig.	GEV No.	description
1	541197	ceramic cartridge D1 ø 35mm D2 ø 23,5mm H1 27,4mm H2 37,5mm H3 56mm with 2 locking pins
2	549973	lever handle for catridge ø35mm intake 9x9 suitable for INOX

fig.	GEV No.	description	tube ø (mm)	projection (mm)	spout height (mm)
1	546034	S spout	18	250	120

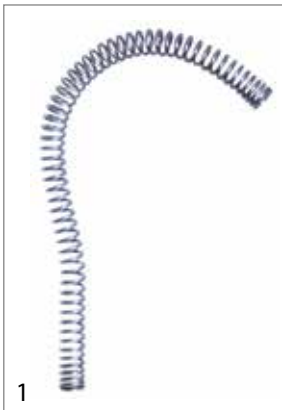

fig.	GEV No.	description	material	H (mm)
1	548351	spring	stainless steel	660

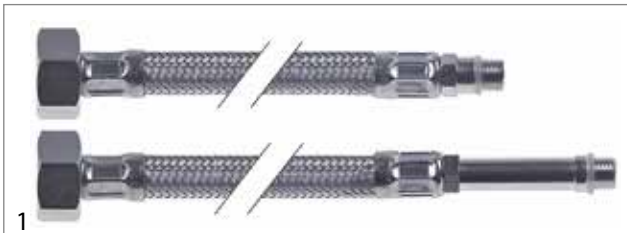

fig.	GEV No.	description	connections	L (mm)
1	549924[1]	flex hose	3/8" - M10x1	500
1	549923[1]	flex hose	1/2" - M10x1	500

[1]with SS connections

fig.	GEV No.	description
1	546301	backflow preventer thread 1/2" H 27mm stainless steel
2	546300	backflow preventer thread 3/8" H 39mm stainless steel
3	548198	backflow preventer ø 19mm H 17mm for eccentrics Qty 1 pcs

fig.	GEV No.	description
4	515132	eccentrics connections 1/2" - 3/4" stainless steel with rosette Qty 2 pcs
5	546263	hose adaptor connection 1/2" - M12x1 stainless steel
6	549483	spring holder stainless steel

fig.	GEV No.	description
7	549482	bracket for spray gun stainless steel
8	549484	wall holder stainless steel L 100mm

Find the complete and up-to-date range of products in our GEV Webshop

INOX AUTOMATIC

with monobloc tap

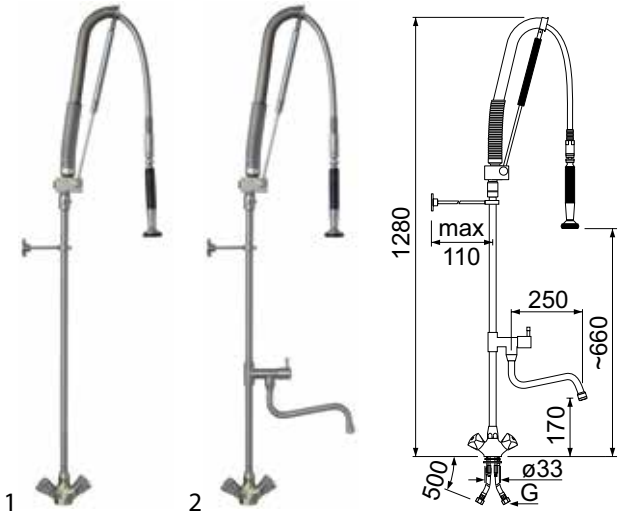

fig.	GEV No.	upper part	G
1	546902	tap head 1/2”	3/8”
1	546903	tap head 1/2”	1/2”
1	546906	ceramic tap head 1/2”	3/8”
1	546907	ceramic tap head 1/2”	1/2”
2	546900	tap head 1/2”	3/8”
2	546901	tap head 1/2”	1/2”
2	546904	ceramic tap head 1/2”	3/8”
2	546905	ceramic tap head 1/2”	1/2”

with bridge mixer tap

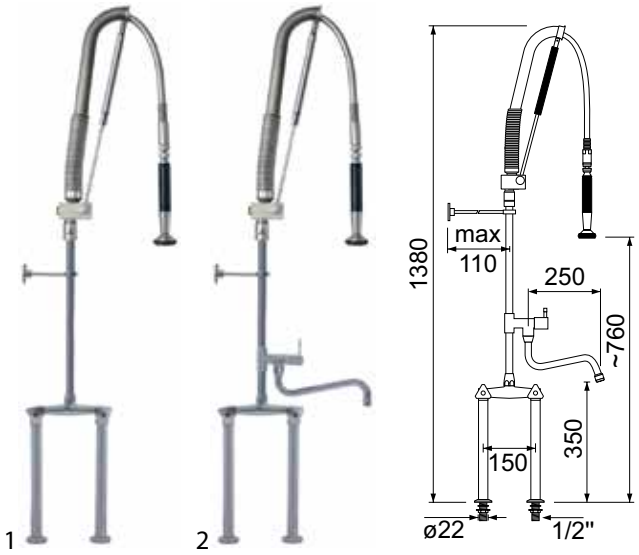

technical data:
hole distance 150mm

fig.	GEV No.	upper part	connection
1	546909	tap head 1/2”	1/2”
1	546911	ceramic tap head 1/2”	1/2”
2	546908	tap head 1/2”	1/2”
2	546910	ceramic tap head 1/2”	1/2”

with wall-mounted water tap

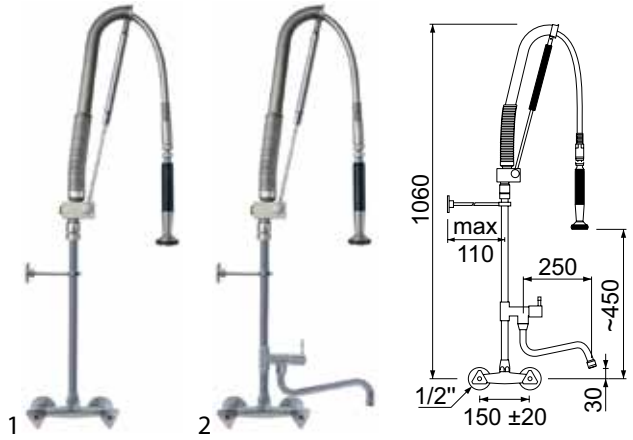

technical data:
hole distance 150±20mm

fig.	GEV No.	upper part	connection
1	546913	tap head 1/2”	1/2”
1	546915	ceramic tap head 1/2”	1/2”
2	546912	tap head 1/2”	1/2”
2	546914	ceramic tap head 1/2”	1/2”

with single lever monobloc tap

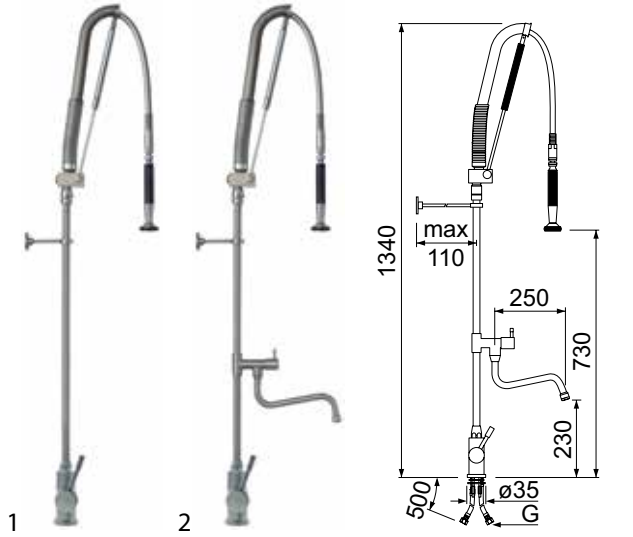

fig.	GEV No.	cartridge	G
1	546918	ceramic cartridge ø 35mm	3/8”
1	546919	ceramic cartridge ø 35mm	1/2”
2	546916	ceramic cartridge ø 35mm	3/8”
2	546917	ceramic cartridge ø 35mm	1/2”

with single lever bridge mixer tap

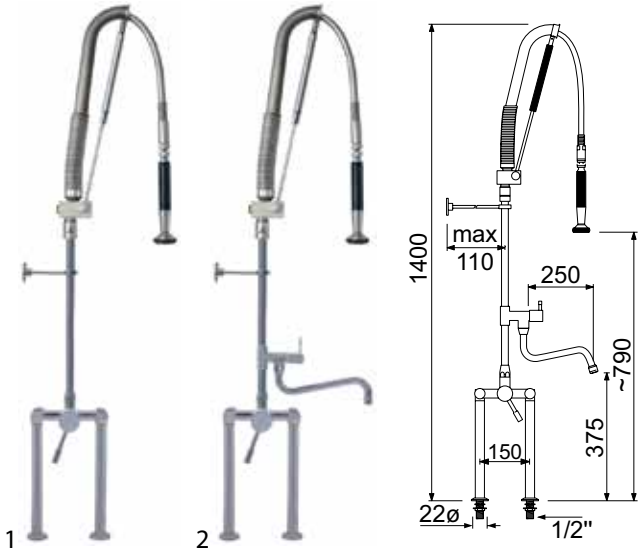

technical data:
hole distance 150mm

fig.	GEV No.	cartridge	connection
1	546923	ceramic cartridge ø 35mm	1/2"
2	546922	ceramic cartridge ø 35mm	1/2"

with single lever wall-mounted water tap

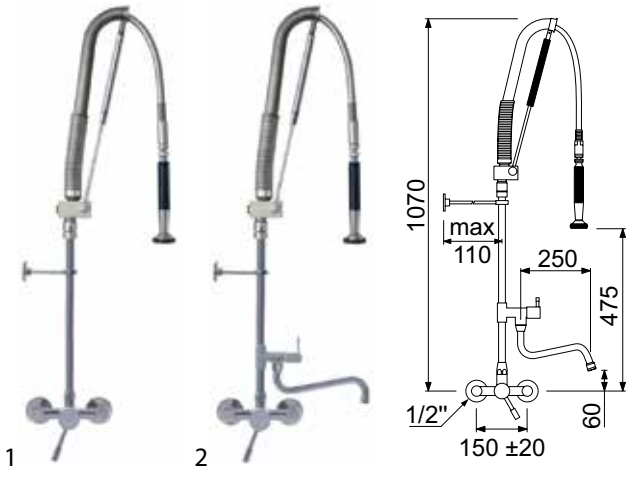

technical data:
hole distance 150±20mm

fig.	GEV No.	cartridge	connection
1	546920	ceramic cartridge ø 35mm	1/2"
2	546921	ceramic cartridge ø 35mm	1/2"

spare parts and accessories

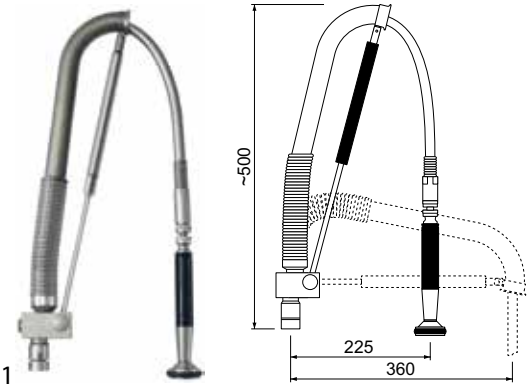

fig.	GEV No.	description
1	545705	pre-rinse unit attachment INOX AUTOMATIC SS

fig.	GEV No.	description
1	545120	gas tension spring INOX L 410mm ø 19mm

fig.	GEV No.	description
2	549294	spring pre-rinse units type automatic stainless steel

fig.	GEV No.	description	connection
1	545123	spray gun	1/2" ET

fig.	GEV No.	description	connections	L (mm)
1	542119[1]	shower hose	1/2"	875

[1]stainless steel bush

fig.	GEV No.	description	TS	RA (°)	application
1	546008	tap head	1/2"	-	cold/hot water
2	549921	ceramic tap head	1/2"	90	cold water
3	549931	ceramic tap head	1/2"	90	hot water

Find the complete and up-to-date range of products in our GEV Webshop

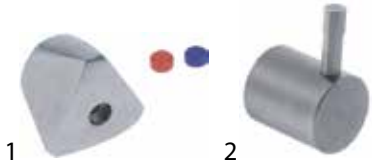

fig.	GEV No.	description	version	application
1	549974	triangular handle	for tap heads 1/2"	cold/hot water
2	549491	lever handle	for tap heads 1/2"	for changeover valve

fig.	GEV No.	description
1	541197	ceramic cartridge D1 ø 35mm D2 ø 23,5mm H1 27,4mm H2 37,5mm H3 56mm with 2 locking pins
2	549973	lever handle for catridge ø35mm intake 9x9 suitable for INOX LINE

fig.	GEV No.	description	tube ø (mm)	projection (mm)	spout height (mm)
1	546034	S spout	18	250	120

fig.	GEV No.	description	connections	L (mm)
1	549924[1]	flex hose	3/8" - M10x1	500
1	549923[1]	flex hose	1/2" - M10x1	500

[1]with SS connections

fig.	GEV No.	description
1	548198	backflow preventer ø 19mm H 17mm for eccentrics Qty 1 pcs
2	546301	backflow preventer thread 1/2" H 27mm stainless steel
3	546300	backflow preventer thread 3/8" H 39mm stainless steel

fig.	GEV No.	description
1	545124	swivel joint INOX LINE IT 1/2" ET 1/2"
2	545121	valve for pre-rinse unit type INOX AUTOMATIC
3	549484	wall holder stainless steel L 100mm

CLASSIC AMERICAN Style

with pillar tap

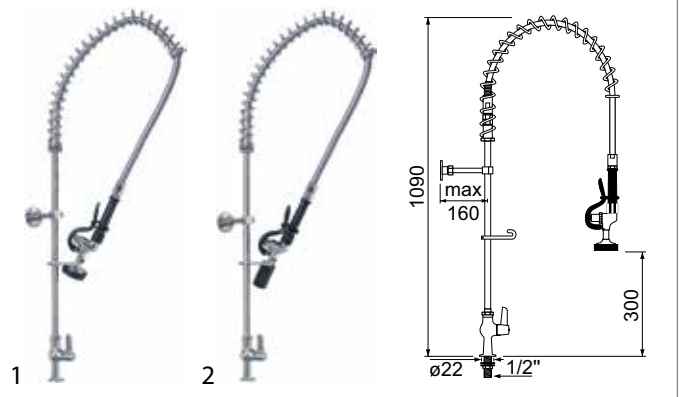

fig.	GEV No.	upper part	connection
1	593301	ceramic tap head 1/2”	1/2”
2	593303	ceramic tap head 1/2”	1/2”

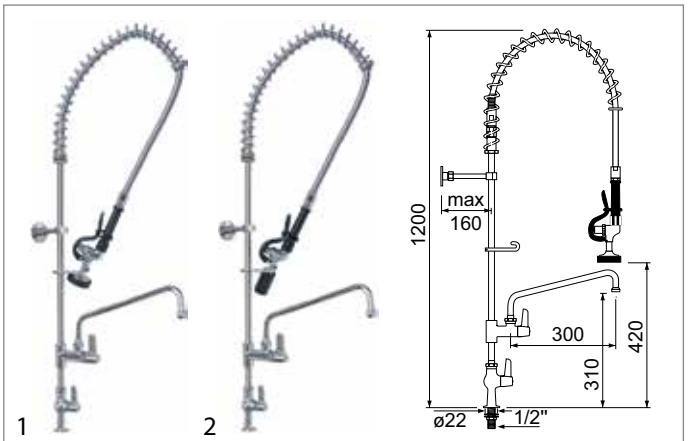

fig.	GEV No.	upper part	connection
1	593302	ceramic tap head 1/2”	1/2”
2	593304	ceramic tap head 1/2”	1/2”

with monobloc tap

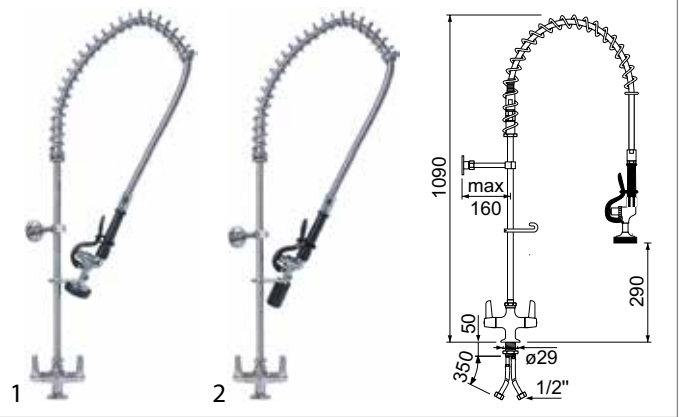

fig.	GEV No.	upper part	connection
1	593321	ceramic tap head 1/2”	1/2”
2	593323	ceramic tap head 1/2”	1/2”

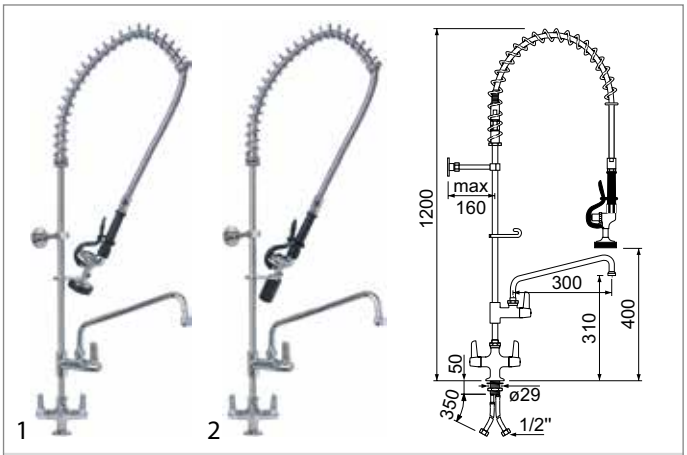

fig.	GEV No.	upper part	connection
1	593322	ceramic tap head 1/2”	1/2”
2	593324	ceramic tap head 1/2”	1/2”

with bridge mixer tap

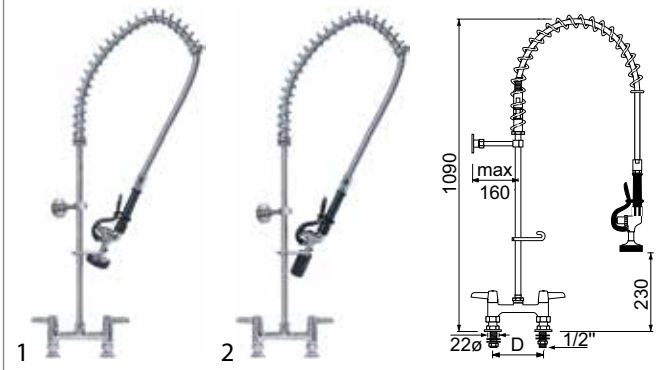

fig.	GEV No.	upper part	D (mm)	connection
1	593331	ceramic tap head 1/2”	4” - 102	1/2”
1	593351	ceramic tap head 1/2”	7” - 180	1/2”
1	593361	ceramic tap head 1/2”	8” - 203	1/2”
1	593341	ceramic tap head 1/2”	6” - 152	1/2”
2	593333	ceramic tap head 1/2”	4” - 102	1/2”
2	593353	ceramic tap head 1/2”	7” - 180	1/2”
2	593363	ceramic tap head 1/2”	8” - 203	1/2”
2	593343	ceramic tap head 1/2”	6” - 152	1/2”

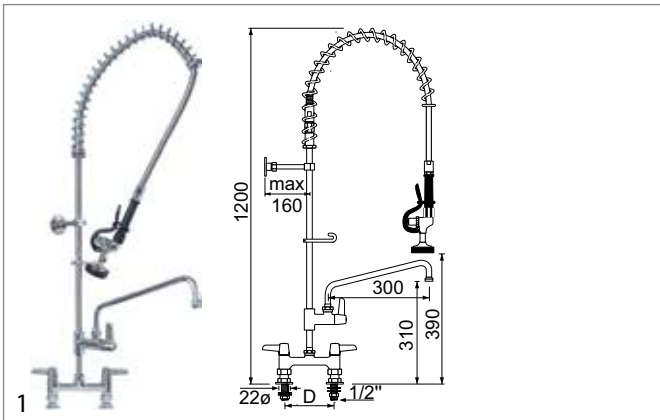

fig.	GEV No.	upper part	D (mm)	connection
1	593332	ceramic tap head 1/2”	4” - 102	1/2”
1	593352	ceramic tap head 1/2”	7” - 180	1/2”
1	593362	ceramic tap head 1/2”	8” - 203	1/2”
1	593342	ceramic tap head 1/2”	6” - 152	1/2”

Table continues overleaf

Find the complete and up-to-date range of products in our GEV Webshop

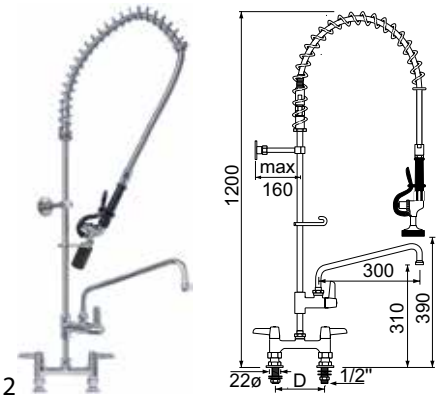

fig.	GEV No.	upper part	D (mm)	connection
2	593334	ceramic tap head 1/2”	4” - 102	1/2”
2	593354	ceramic tap head 1/2”	7” - 180	1/2”
2	593364	ceramic tap head 1/2”	8” - 203	1/2”
2	593344	ceramic tap head 1/2”	6” - 152	1/2”

with wall-mounted water tap

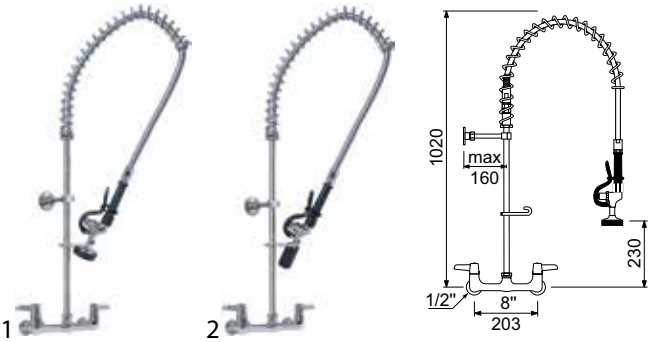

technical data:
hole distance 8” - 203mm

fig.	GEV No.	upper part	connection
1	593371	ceramic tap head 1/2”	1/2”
2	593373	ceramic tap head 1/2”	1/2”

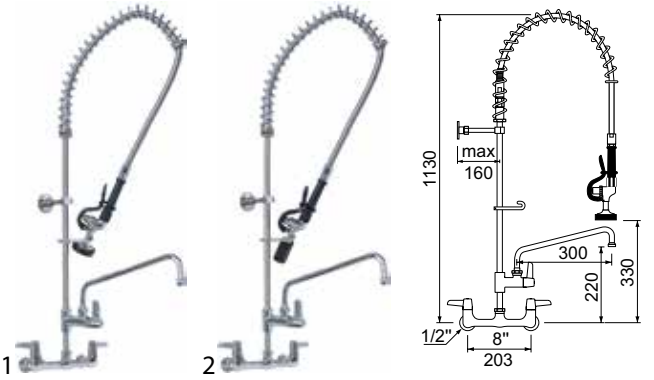

technical data:
hole distance 8” - 203mm

fig.	GEV No.	upper part	connection
1	593372	ceramic tap head 1/2”	1/2”
2	593374	ceramic tap head 1/2”	1/2”

Hangman

with pillar tap

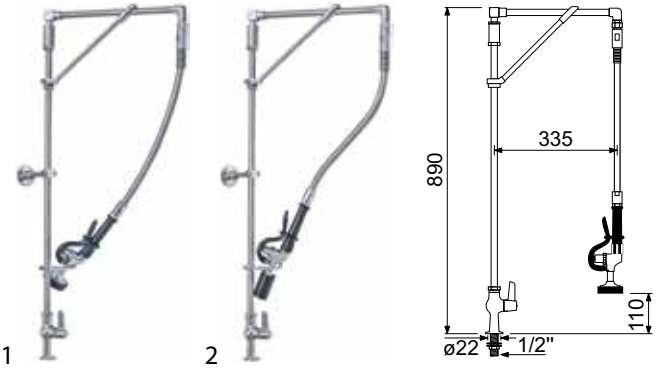

fig.	GEV No.	upper part	connection
1	593305	ceramic tap head 1/2”	1/2”
2	593307	ceramic tap head 1/2”	1/2”

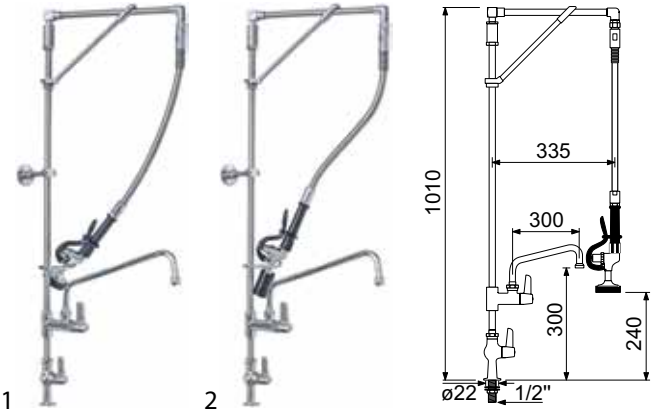

fig.	GEV No.	upper part	connection
1	593306	ceramic tap head 1/2”	1/2”
2	593308	ceramic tap head 1/2”	1/2”

with monobloc tap

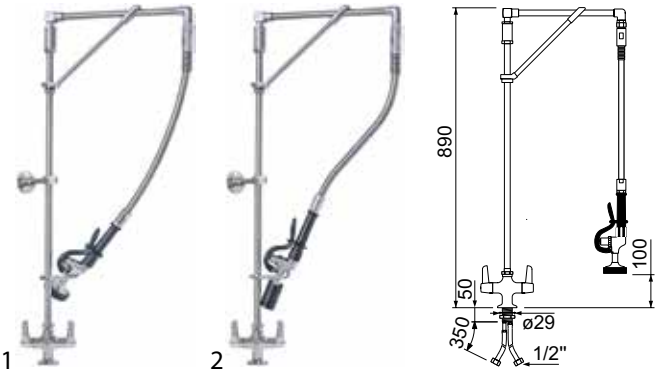

fig.	GEV No.	upper part	connection
1	593325	ceramic tap head 1/2”	1/2”
2	593327	ceramic tap head 1/2”	1/2”

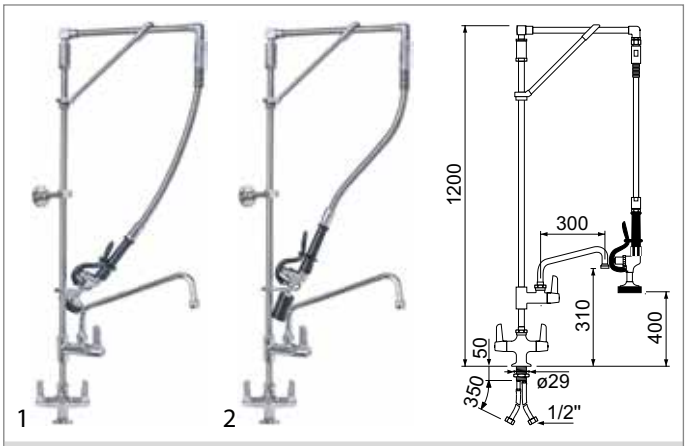

fig.	GEV No.	upper part	connection
1	593326	ceramic tap head 1/2”	1/2”
2	593328	ceramic tap head 1/2”	1/2”

with bridge mixer tap

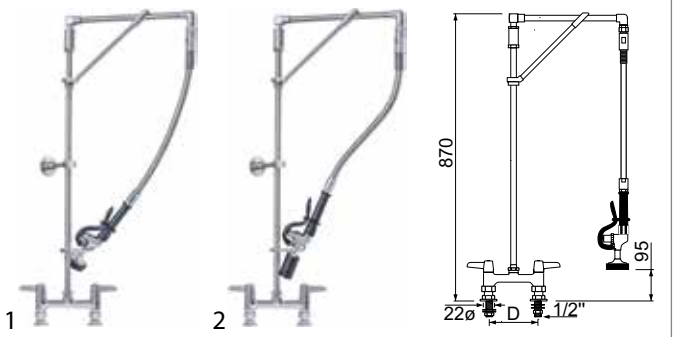

fig.	GEV No.	upper part	D (mm)	connection
1	593335	ceramic tap head 1/2”	4” - 102	1/2”
1	593355	ceramic tap head 1/2”	7” - 180	1/2”
1	593365	ceramic tap head 1/2”	8” - 203	1/2”
1	593345	ceramic tap head 1/2”	6” - 152	1/2”
2	593337	ceramic tap head 1/2”	4” - 102	1/2”
2	593357	ceramic tap head 1/2”	7” - 180	1/2”
2	593347	ceramic tap head 1/2”	6” - 152	1/2”

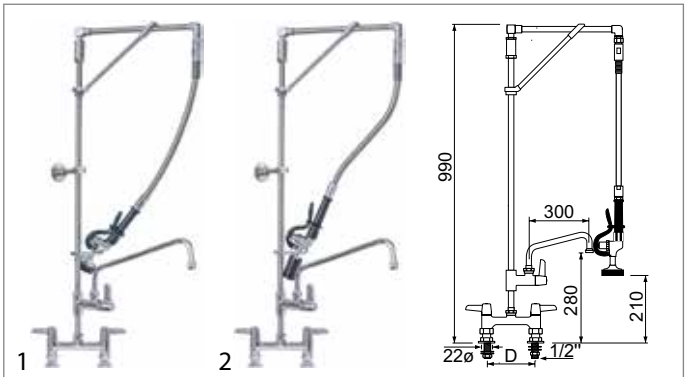

fig.	GEV No.	upper part	D (mm)	connection
1	593336	ceramic tap head 1/2”	4” - 102	1/2”
1	593356	ceramic tap head 1/2”	7” - 180	1/2”
1	593366	ceramic tap head 1/2”	8” - 203	1/2”
1	593346	ceramic tap head 1/2”	6” - 152	1/2”
2	593338	ceramic tap head 1/2”	4” - 102	1/2”
2	593358	ceramic tap head 1/2”	7” - 180	1/2”
2	593368	ceramic tap head 1/2”	8” - 203	1/2”
2	593348	ceramic tap head 1/2”	6” - 152	1/2”

with wall-mounted water tap

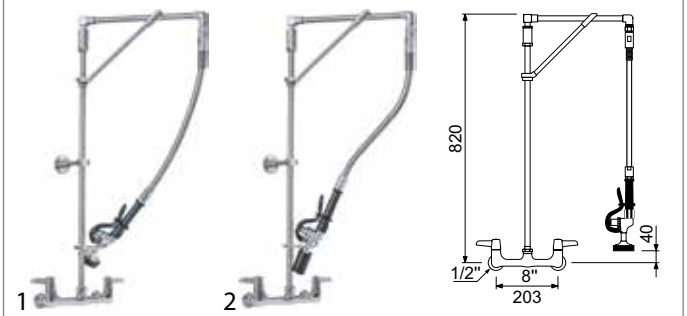

fig.	GEV No.	upper part	D (mm)	connection
1	593375	ceramic tap head 1/2”	8” - 203	1/2”
2	593377	ceramic tap head 1/2”	8” - 203	1/2”

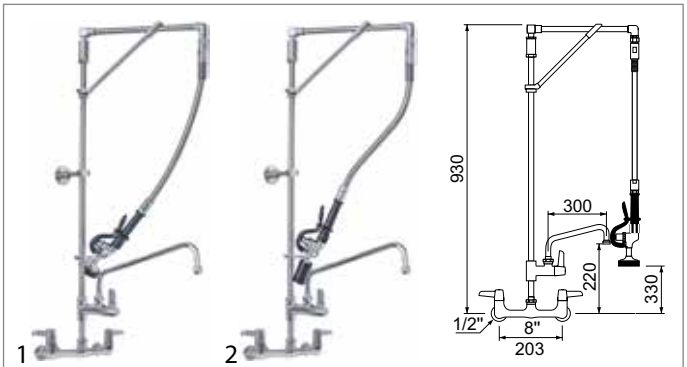

fig.	GEV No.	upper part	D (mm)	connection
1	593376	ceramic tap head 1/2”	8” - 203	1/2”
2	593378	ceramic tap head 1/2”	8” - 203	1/2”

pre-rinse units SHORT LINE

with pillar tap

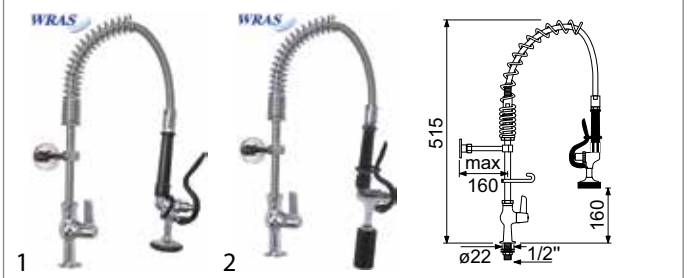

fig.	GEV No.	upper part	connection
1	545964	ceramic tap head 1/2”	1/2”
2	545967	ceramic tap head 1/2”	1/2”

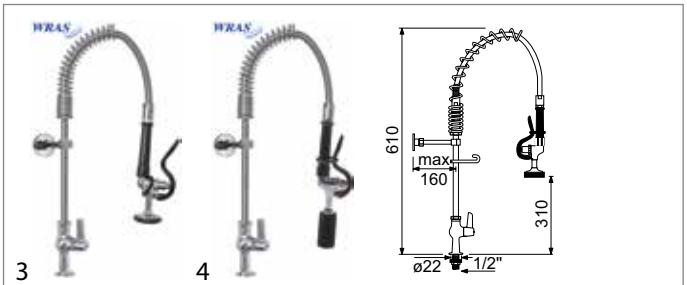

fig.	GEV No.	upper part	connection
3	545965	ceramic tap head 1/2”	1/2”
4	545968	ceramic tap head 1/2”	1/2”

Find the complete and up-to-date range of products in our GEV Webshop

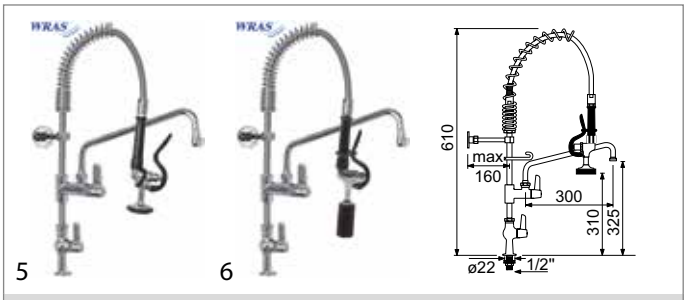

fig.	GEV No.	upper part	connection
5	545966	ceramic tap head 1/2”	1/2”
6	545969	ceramic tap head 1/2”	1/2”

with monobloc tap

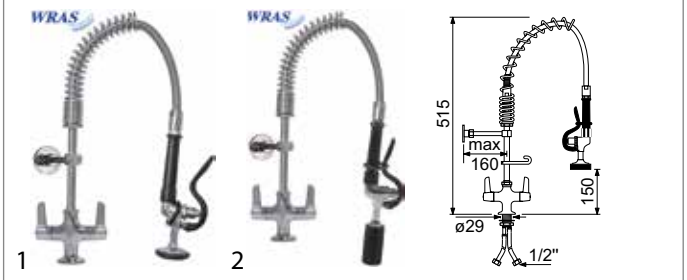

fig.	GEV No.	upper part	connection
1	545970	ceramic tap head 1/2”	1/2”
2	545973	ceramic tap head 1/2”	1/2”

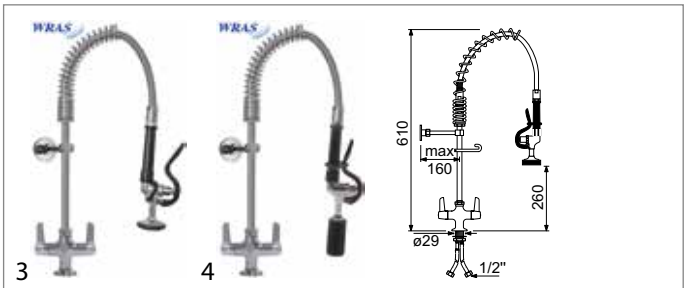

fig.	GEV No.	upper part	connection
3	545971	ceramic tap head 1/2”	1/2”
4	545974	ceramic tap head 1/2”	1/2”

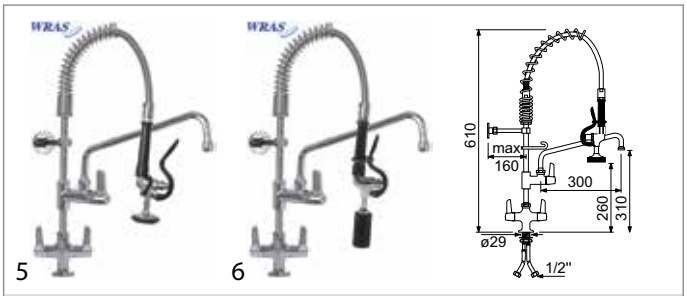

fig.	GEV No.	upper part	connection
5	545972	ceramic tap head 1/2”	1/2”
6	545975	ceramic tap head 1/2”	1/2”

with bridge mixer tap

fig.	GEV No.	upper part	D	connection
1	545976	ceramic tap head 1/2”	6” - 152	1/2”
1	545982	ceramic tap head 1/2”	7” - 180	1/2”
2	545979	ceramic tap head 1/2”	6” - 152	1/2”
2	545985	ceramic tap head 1/2”	7” - 180	1/2”

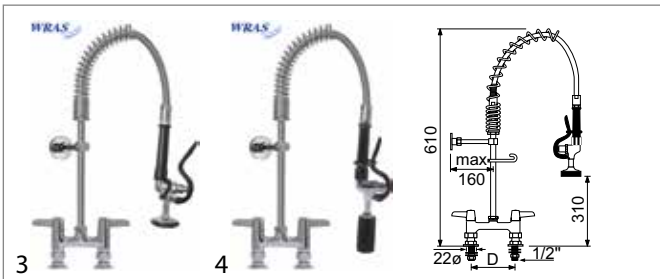

fig.	GEV No.	upper part	D	connection
3	545977	ceramic tap head 1/2”	6” - 152	1/2”
3	545983	ceramic tap head 1/2”	7” - 180	1/2”
4	545980	ceramic tap head 1/2”	6” - 152	1/2”
4	545986	ceramic tap head 1/2”	7” - 180	1/2”

fig.	GEV No.	upper part	D	connection
5	545978	ceramic tap head 1/2”	6” - 152	1/2”
5	545984	ceramic tap head 1/2”	7” - 180	1/2”
6	545981	ceramic tap head 1/2”	6” - 152	1/2”
6	545987	ceramic tap head 1/2”	7” - 180	1/2”

spare parts and accessories

fig.	GEV No.	description	connection	Qmax. (l/min)
1	549333	spray gun	7/8"-20UNEF	at ca. 4bar 12
2	545134	spray gun	7/8"-20UNEF	at ca. 4bar 12
3	593011	spray gun	7/8"-20UNEF	at ca. 4bar 12
4	545133	spray gun	7/8"-20UNEF	at ca. 4bar 4,5

fig.	GEV No.	description	connection	Qmax. (l/min)
5	545132	spray gun	7/8"-20UNEF	at ca. 4bar 4,5
6	547599	handle	3/4"-14UNF - 7/8"-20UNF	-
7	547754	pressure pin	-	-

fig.	GEV No.	description	connections	L (mm)
1	545127	shower hose	7/8"-20UNEF	430
1	593012	shower hose	7/8"-20UNEF	950

fig.	GEV No.	description	connections	L (mm)
2	545128	shower hose	7/8"-20UNEF	490
2	547594	shower hose	7/8"-20UNEF	950

fig.	GEV No.	description	TS	RA (°)	application
1	593014	ceramic tap head	1/2"	90	cold water
2	593015	ceramic tap head	1/2"	90	hot water
3	593016	lever handle	-	-	cold/hot water

fig.	GEV No.	description	projection (mm)	spout height (mm)	tube ø (mm)
1	547741	R-spout	145	160	16
1	547742	R-spout	190	145	16
1	547743	R-spout	220	140	16
2	547744	HU-spout	155	50	16
2	547745	HU-spout	205	65	16
2	547746	HU-spout	260	85	16
2	547747	HU-spout	300	100	16
2	547748	HU-spout	350	110	16
2	547749	HU-spout	400	125	16
2	547600	HU-spout	450	140	16

fig.	GEV No.	description	material	H (mm)
1	545119	spring	chrome-plated	210

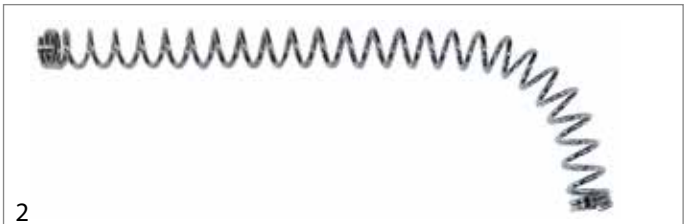

fig.	GEV No.	description	material	H (mm)
2	547596	spring	chrome-plated	580

Find the complete and up-to-date range of products in our GEV Webshop

fig.	GEV No.	description
1	542844	backflow preventer thread 1/2" L 17mm Qty 1 pcs
2	543253	backflow preventer thread 1/2" L 17mm Qty 1 pcs
3	547595	bracket for spray gun

fig.	GEV No.	description
4	547757	spring holder L 71mm IT 3/8" ET 7/8"-20UNEF
5	547597	wall holder

PREMIUM AMERICAN Style

with pillar tap

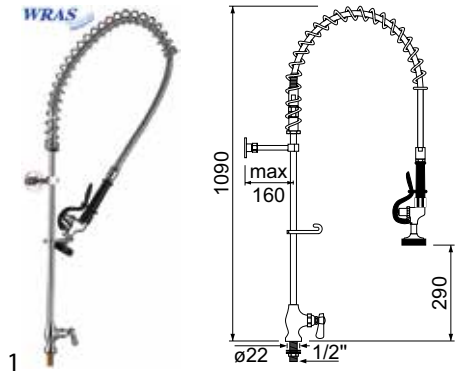

fig.	GEV No.	upper part	connection
1	547300	tap head	1/2"

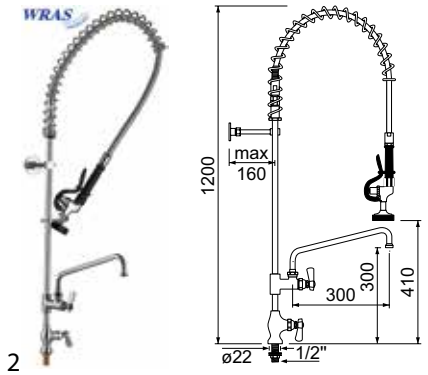

fig.	GEV No.	upper part	connection
2	549874	tap head	1/2"

with wall tap

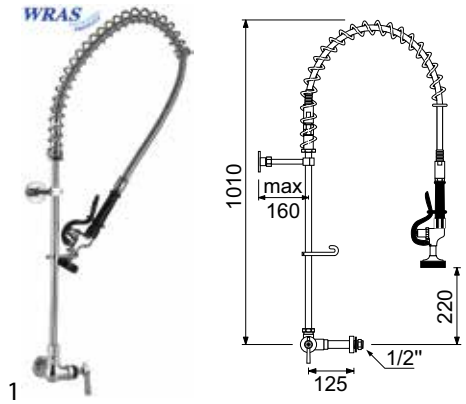

fig.	GEV No.	upper part	connection
1	547302	tap head	1/2"

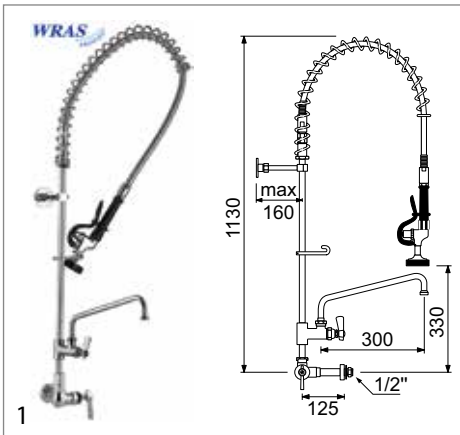

fig.	GEV No.	upper part	connection
1	545930	tap head	1/2"

with monobloc tap

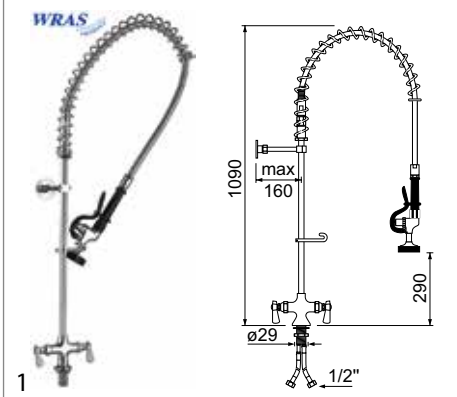

fig.	GEV No.	upper part	connection
1	547301	tap head	1/2"

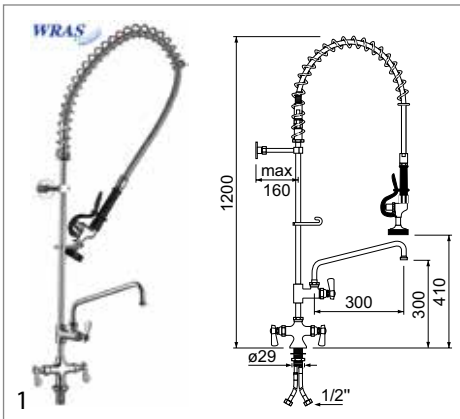

fig.	GEV No.	upper part	connection
1	549873	tap head	1/2"

Find the complete and up-to-date range of products in our GEV Webshop

with bridge mixer tap

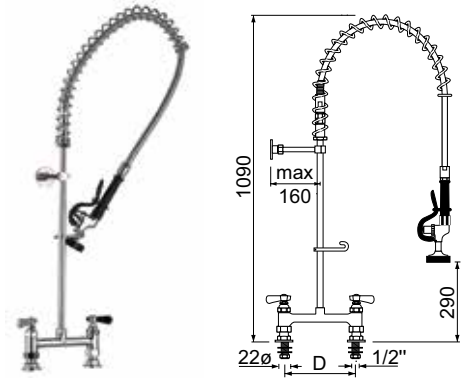

1

fig.	GEV No.	upper part	D	connector
1	547304	tap head	4" - 102	1/2"
1	549991[1]	tap head	7" - 180	1/2"
1	547306	tap head	8" - 203	1/2"
1	547305	tap head	6" - 152	1/2"

[1]WRAS approved

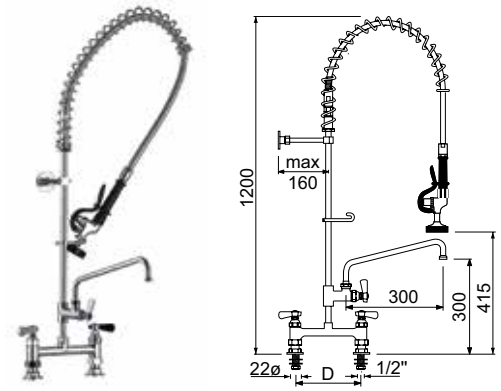

1

fig.	GEV No.	upper part	D	connector
1	549878	tap head	4" - 102	1/2"
1	549992[1]	tap head	7" - 180	1/2"
1	549880	tap head	8" - 203	1/2"
1	549879	tap head	6" - 152	1/2"

[1]WRAS approved

with wall-mounted water tap

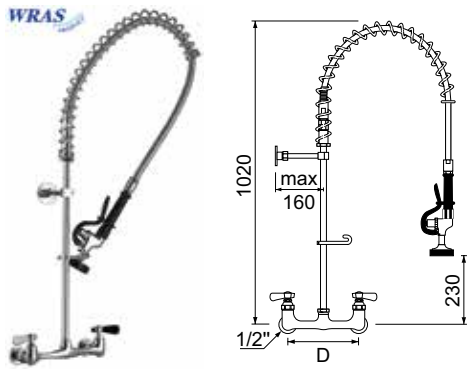

1

fig.	GEV No.	upper part	D	connection
1	545041	tap head	7" - 180	1/2"
1	547303	tap head	8" - 203	1/2"

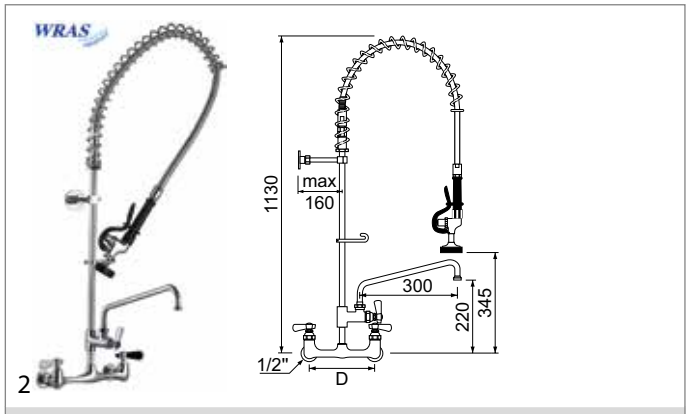

2

fig.	GEV No.	upper part	D	connection
2	545042	tap head	8" - 203	1/2"
2	549875	tap head	8" - 203	1/2"

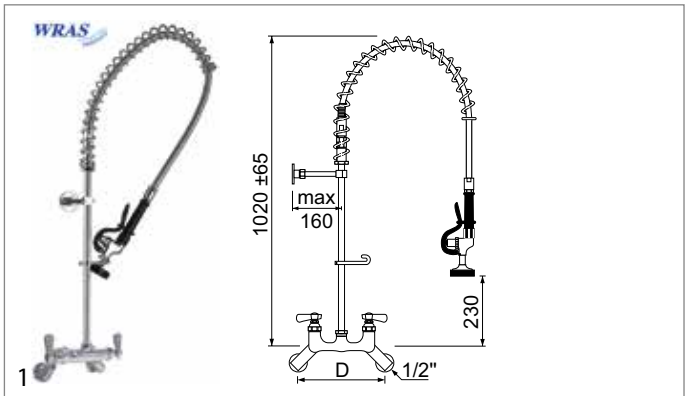

1

fig.	GEV No.	upper part	D	connection
1	545988	tap head	2¾"-8½", 71-216	1/2"

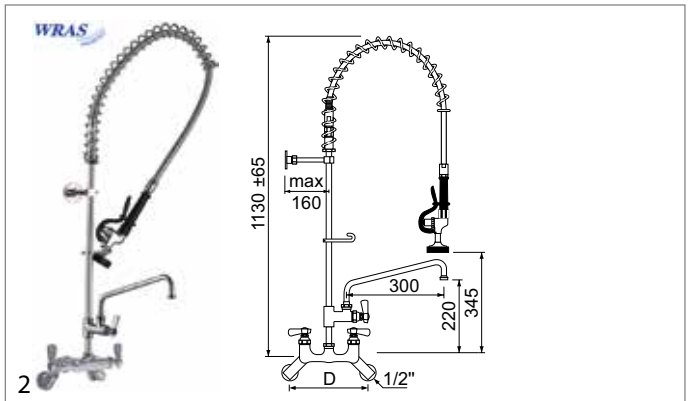

2

fig.	GEV No.	upper part	D	connection
2	545989	tap head	2¾"-8½", 71-216	1/2"

without taps

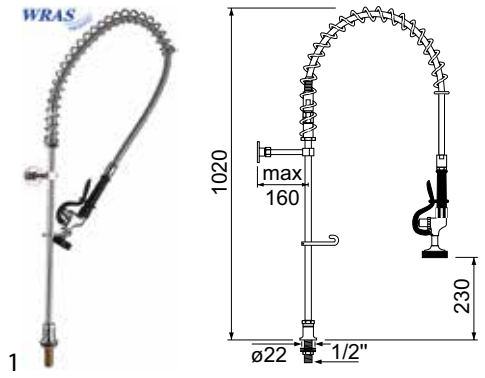

fig.	GEV No.	version	connection
1	549876	with connecting adapter	1/2”

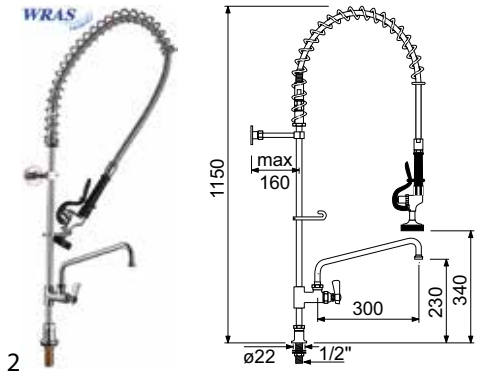

fig.	GEV No.	version	connection
2	549877	with connecting adapter	1/2”

hangman

with pillar tap

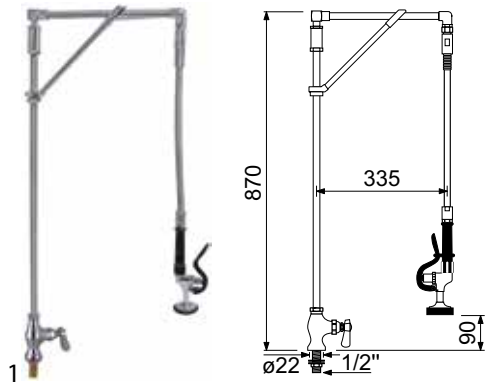

fig.	GEV No.	upper part	connection
1	545949	tap head	1/2”

with monobloc tap

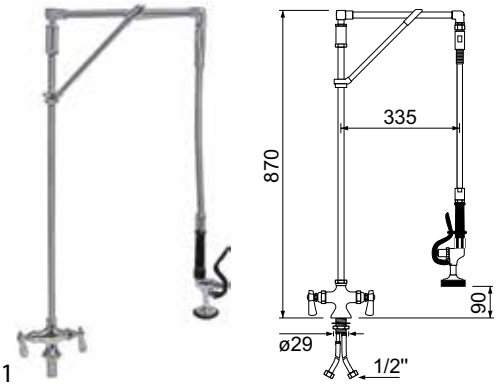

fig.	GEV No.	upper part	connection
1	545950	tap head	1/2”

with bridge mixer tap

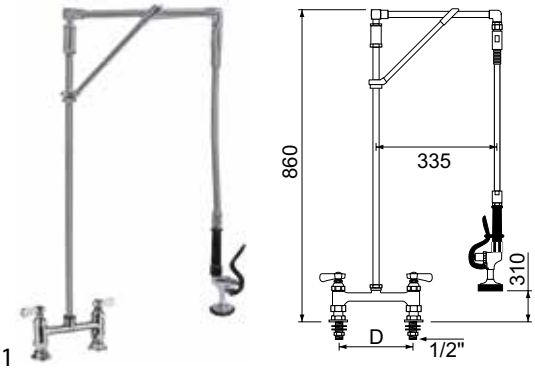

fig.	GEV No.	upper part	D	connector
1	545951	tap head	4” - 102	1/2”
1	545952	tap head	6” - 152	1/2”
1	545953	tap head	7” - 180	1/2”
1	545954	tap head	8” - 203	1/2”

with wall-mounted water tap

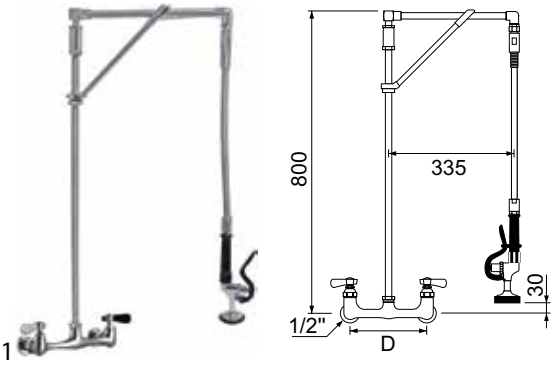

fig.	GEV No.	upper part	D	connector
1	545915	tap head	180	1/2”

Find the complete and up-to-date range of products in our GEV Webshop

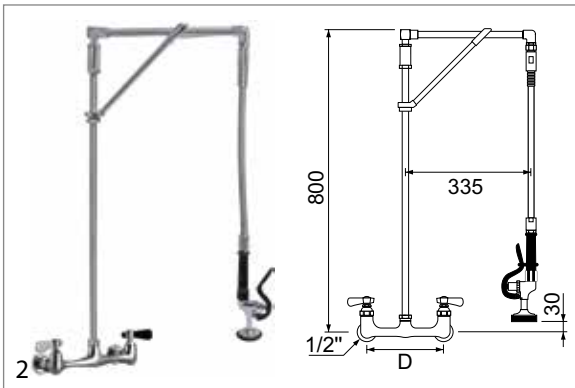

fig.	GEV No.	upper part	D	connector
2	545916	tap head	203±12	1/2”

pre-rinse units SHORT LINE

with pillar tap

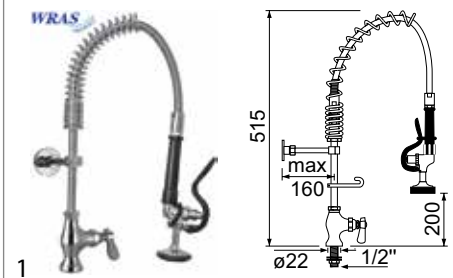

fig.	GEV No.	upper part	connection
1	545931	tap head	1/2”

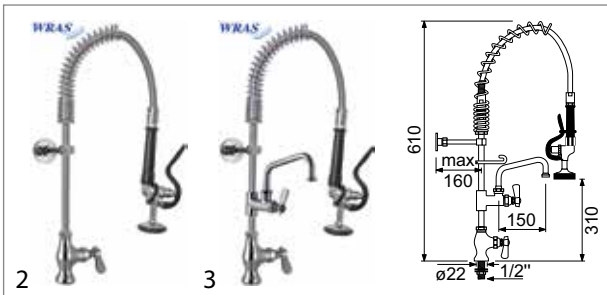

fig.	GEV No.	upper part	connection
2	545932	tap head	1/2”

fig.	GEV No.	upper part	connection
3	545933	tap head	1/2”

with monobloc tap

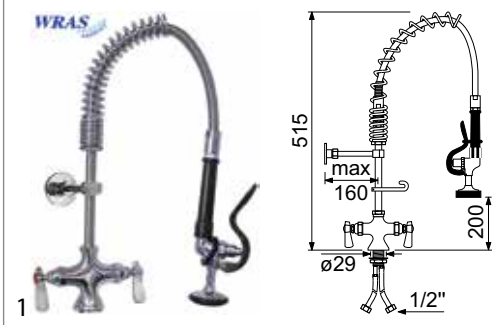

fig.	GEV No.	upper part	connection
1	545934	tap head	1/2”

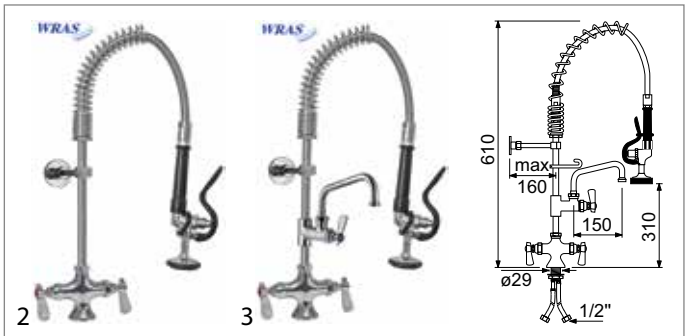

fig.	GEV No.	upper part	connection
2	545935	tap head	1/2”

fig.	GEV No.	upper part	connection
3	545936	tap head	1/2”

with bridge mixer tap

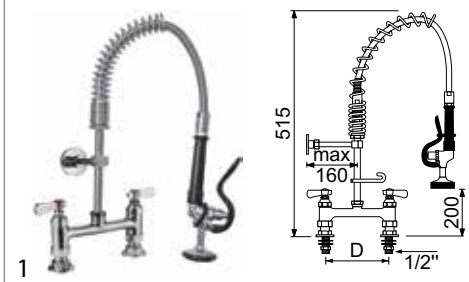

fig.	GEV No.	upper part	D	connection
1	545937	tap head	4” - 102	1/2”
1	545938	tap head	6” - 152	1/2”
1	545939[1]	tap head	7” - 180	1/2”
1	545940	tap head	8” - 203	1/2”

[1]WRAS approved

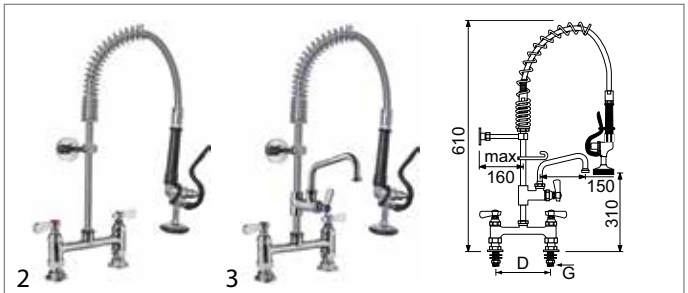

fig.	GEV No.	upper part	D	connection
2	545941	tap head	4” - 102	1/2”
2	545942	tap head	6” - 152	1/2”
2	545943[1]	tap head	7” - 180	1/2”
2	545944	tap head	8” - 203	1/2”
3	545945	tap head	4” - 102	1/2”
3	545946	tap head	6” - 152	1/2”
3	545947[1]	tap head	7” - 180	1/2”
3	545948	tap head	8” - 203	1/2”

[1]WRAS approved

spare parts and accessories

fig.	GEV No.	description	connection	Qmax. (l/min)
1	549333	spray gun	7/8"-20UNEF	at ca. 4bar 12
2	545134	spray gun	7/8"-20UNEF	at ca. 4bar 12
3	545131	spray gun	7/8"-20UNEF	at ca. 4bar 2,5
3	545133	spray gun	7/8"-20UNEF	at ca. 4bar 4,5
4	545132	spray gun	7/8"-20UNEF	at ca. 4bar 4,5

fig.	GEV No.	description	connection	Qmax. (l/min)
5	547599	handle	3/4"-14UNF - 7/8"-20UNF	-
6	547754	pressure pin	-	-

fig.	GEV No.	description	connections	L (mm)
1	545127	shower hose	7/8"-20UNEF	430

fig.	GEV No.	description	connections	L (mm)
2	545128	shower hose	7/8"-20UNEF	490
2	547594	shower hose	7/8"-20UNEF	950

fig.	GEV No.	description	application
1	547750	tap head	cold water
1	547751	tap head	hot water
2	548620	screw cap	for tap head
3	547752	lever handle	cold/hot water

fig.	GEV No.	description	tube ø (mm)	projection (mm)	spout height (mm)
1	547741	R-spout	16	145	160
1	547742	R-spout	16	190	145
1	547743	R-spout	16	220	140
2	547744	HU-spout	16	155	50
2	547745	HU-spout	16	205	65
2	547746	HU-spout	16	260	85
2	547747	HU-spout	16	300	100
2	547748	HU-spout	16	350	110
2	547749	HU-spout	16	400	125
2	547600	HU-spout	16	450	140

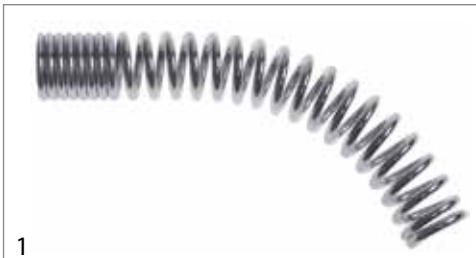

fig.	GEV No.	description	material	H (mm)
1	545119	spring	chrome-plated	210

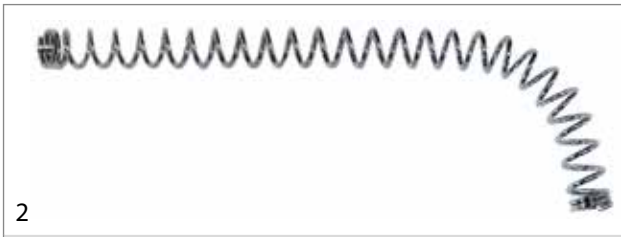

fig.	GEV No.	description	material	H (mm)
2	547596	spring	chrome-plated	580

Find the complete and up-to-date range of products in our GEV Webshop

PREMIUM AMERICAN STYLE

fig.	GEV No.	description
1	547595	bracket for spray gun
2	547597	wall holder
3	547757	spring holder L 71mm IT 3/8" ET 7/8"-20UNEF

spare parts of other producers

suitable for CHAVONNET

1

fig.	GEV No.	description	connection
1	547558	spray gun	1/2" ET

1

2

fig.	GEV No.	description	TS	RA (°)	application
1	547555	ceramic tap head	1/2"	90	cold water
2	547556	ceramic tap head	1/2"	90	hot water

1

fig.	GEV No.	description	connections	L (mm)
1	547562	shower hose	1/2"	950
1	547563	shower hose	1/2"	1200

2

fig.	GEV No.	description	connections	L (mm)
2	548408	shower hose	1/2" - M21x1	1300

1

fig.	GEV No.	description	material	H (mm)
1	548351	spring	stainless steel	660

1 2

fig.	GEV No.	description
1	548354	spring holder ø 20,5mm for stand pipe
2	547422	wall holder for pre-rinse units L 163mm

suitable for DELABIE

1

fig.	GEV No.	description	connection
1	547580	spray gun	1/2" ET

1 2 3 4

fig.	GEV No.	description	TS	application
1	540411	tap head	1/2"	cold/hot water
2	540412	triangular handle	-	cold/hot water
3	540328	marking cap	-	cold water
4	540420	marking cap	-	hot water

1

fig.	GEV No.	description	tube ø (mm)	projection (mm)	spout height (mm)
1	547684	S spout	18	200-290	10

1

fig.	GEV No.	description	material	H (mm)
1	548351	spring	stainless steel	660

Find the complete and up-to-date range of products in our GEV Webshop

1

fig.	GEV No.	description	connections	L (mm)
1	540145	shower hose	1/2"	950
1	540146	shower hose	1/2"	1200

1 2

fig.	GEV No.	description
1	548354	spring holder ø 20,5mm for stand pipe
2	547422	wall holder for pre-rinse units L 163mm

suitable for ECHTERMANN

1 2 3

fig.	GEV No.	description	connection	Ref. No.
1	548011	spray gun	1/2" ET	—
2	549383	spray gun	1/2" ET	6631.10-1 Alternativ
3	549384	spray gun	1/2" ET	6631-1 Alternativ

1 2 3

fig.	GEV No.	description	Ref. No.
1	547451	pressure pin for pre-rinse unit suitable for TOP CLEAN since 07/2009 L 56,5mm	6530-5/8 Alternativ
2	545700	pressure pin for pre-rinse unit suitable for TOP CLEAN until 07/2009 L 54mm	6530-11/14 Alternativ
3	547450	pressure pin for spray gun suitable for EURO CLEAN/EURO SINGLE since 01/2009	2452.21-4/8 Alternativ

4 5 6

fig.	GEV No.	description	Ref. No.
4	540444	pressure pin for spray gun suitable for EURO CLEAN/EURO SINGLE until 12/2008	6631-1-3/4 Alternativ
5	540008	shower head connection 1/2" metal	6631-1-26.2 Alternativ
6	547447	shower head connection 1/2" metal ø 50mm	6631-6 Alternativ

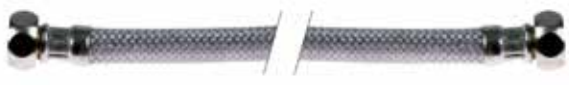
1

fig.	GEV No.	description	connections	L (mm)	Ref. No.
1	547431	shower hose	1/2"	800	6532-3/0800 Alternativ
1	547432	shower hose	1/2"	1000	6532-3/1000 Alternativ
1	547433	shower hose	1/2"	1250	6532-3/1250 Alternativ

2

fig.	GEV No.	description	connections	L (mm)	Ref. No.
2	540066[1]	shower hose	1/2"	1000	6631-2/1000 Alternativ
2	540070[1]	shower hose	1/2"	1250	6631-2/1250 Alternativ

[1]brass bush

1 2 3

fig.	GEV No.	description	TS	application	Ref. No.
1	547415	non-return valve tap head	1/2"	cold/hot water	2145.21/8.6.1 Alternativ
2	547554	non-return valve tap head	1/2"	cold/hot water	2145.21/0.0.1 Alternativ
3	547427	hood handle	-	for tap heads 1/2"	2144.20-20 Alternativ

1

fig.	GEV No.	description	D1 ø (mm)	H1 (mm)	Ref. No.
1	540452	ceramic cartridge	40	30	6644-6-1

1

fig.	GEV No.	description	tube ø (mm)	projection (mm)	spout height (mm)	Ref. No.
1	547566	S spout	18	200	120	6360.30/200 Alternativ

1 2

fig.	GEV No.	description	TS	version	Ref. No.
1	547492	tap aerator	M22x1	with plastic insert	2374.00 Alternativ
2	540805	tap aerator	M24x1	with plastic insert	2377.00 Alternativ

fig.	GEV No.	description	H (mm)	version	Ref. No.
1	547437	riser pipe	420	without swivel tap	6536-8 Alternativ
1	547438	riser pipe	700	without swivel tap	6534-8 Alternativ
2	549951	riser pipe	515	with swivel tap	6539.05-9 Alternativ
2	549952	riser pipe	700	with swivel tap	6534.02-9 Alternativ
3	547428	riser pipe	515	with swivel tap	6539.05-9/250 Alternativ
3	547429	riser pipe	700	with swivel tap	6534.02-9/250 Alternativ

fig.	GEV No.	material	H (mm)	Ref. No.
1	548351	stainless steel	660	6631-3 Alternativ

fig.	GEV No.	description	connection	L (mm)	Ref. No.
1	547407	pillar	1/2" - 3/4"	300	6536-7 Alternativ
2	547408	pillar	1/2" - 3/4"	300	6635-7 Alternativ

fig.	GEV No.	description	Ref. No.
1	542948	spring holder	6631-5-1 Alternativ
2	547422	wall holder for pre-rinse units L 163mm	6631.007-4 Alternativ

fig.	GEV No.	description	Ref. No.
3	547436	wall holder for riser pipe L 150mm ø 20,5mm	6531-4 Alternativ
3	545307	wall holder for riser pipe L 350mm ø 20,5mm	6531-4/350 Alternativ

fig.	GEV No.	description
1	540368	backflow preventer thread 3/8" L 27mm Qty 1 pcs
2	542844	backflow preventer thread 1/2" L 17mm Qty 1 pcs
3	543254	backflow preventer thread 3/4" inlet IT outlet ET
4	547982	backflow preventer ø 15mm H 16mm Qty 1 pcs

fig.	GEV No.	description	connection	Ref. No.
1	547400	pillar tap	1/2"	6632-6 Altenativ
2	540351	monobloc tap	3/8"	6644-6 Alternativ
3	547401	monobloc tap	3/8"	—

fig.	GEV No.	description	connection	Ref. No.
4	545201	single lever monobloc tap	3/8"	6644.00-6 Alternativ
5	547409	swivel tap	1/2"	2401.20/250 Alternativ
6	547404	bridge mixer tap	3/4"	6536-6 Alternativ

Find the complete and up-to-date range of products in our GEV Webshop

fig.	GEV No.	description	connection	Ref. No.
7	547402	wall-mounted water tap	3/4"	6635-6 Alternativ
8	547403	wall-mounted water tap	1/2"	6637-6 Alternativ
9	547405	wall-mounted water tap	1/2"	6539-6 Alternativ

fig.	GEV No.	description	connection	Ref. No.
10	540188	single lever wall-mounted water tap	1/2"	6645-6 Alternativ
11	545203	single lever wall-mounted water tap	1/2"	6647-00-6 Alternativ
12	545202	single lever wall-mounted water tap	3/4"	6645.00-6 Alternativ

miscellaneous

fig.	GEV No.	description	Ref. No.
1	515090	eccentrics connection 1/2" - 3/4" with rosette Qty 2 pcs	6637-6-18/19 Aternativ
2	548353	swivel joint IT 1/2" ET 1/2" brass	6530-6 Alternativ

fig.	GEV No.	description	Ref. No.
3	547434	gas tension spring	6530-4 Alternativ

suitable for KLARCO

fig.	GEV No.	description	connection	colour	Ref. No.
1	548192	spray gun	1/2" ET	black	0P.P046.00.00 Alternativ
2	542077	spray gun	1/2" ET	blue	—
3	542856	spray gun	1/2" IT	black	0P.P045.00.00/N

fig.	GEV No.	description	TS	RA (°)	application	Ref. No.
1	541384	tap head	1/2"	-	cold/hot water	0030010 0P.V030.00.00
2	548416	tap head	1/2"	-	cold/hot water	0P.V0L0.00.00

fig.	GEV No.	description	TS	RA (°)	application	Ref. No.
3	547965	triangular handle	-	-	cold/hot water	0P.H033.00.00/B 0P.H033.00.00/R
4	541535	handle	-	-	cold water	H36/B
5	541536	handle	-	-	hot water	H36/R

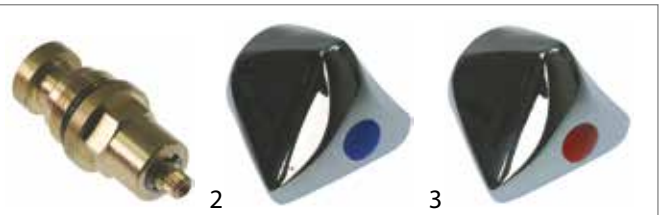

fig.	GEV No.	description	TS	RA (°)	application	Ref. No.
1	541380	tap head	3/4"	-	cold/hot water	0030013/1 0P.V020.00.00
2	541378	triangular handle	-	-	cold water	0055224/B 0P.H013.00.00/B
3	541379	triangular handle	-	-	hot water	0055224/R 0P.H013.00.00/R

fig.	GEV No.	description	TS	RA (°)	application	Ref. No.
1	548414	ceramic tap head	1/2"	90	cold water	0030021/D 0P.V040.00.00/D
1	548434	ceramic tap head	3/4"	90	cold water	0P.V050.00.00/S
2	548415	ceramic tap head	1/2"	90	hot water	0P.V040.00.00/S
2	548433	ceramic tap head	3/4"	90	hot water	0P.V050.00.00/D

3 4 5

fig.	GEV No.	description	TS	RA (°)	application	Ref. No.
3	547965	triangular handle	-	-	cold/hot water	0P.H033.00.00/B 0P.H033.00.00/R
4	541535	handle	-	-	cold water	H36/B
5	541536	handle	-	-	hot water	H36/R

1

fig.	GEV No.	description	D1 ø (mm)	H1 (mm)	Ref. No.
1	541403	ceramic cartridge	47	30.5	0030110 0P.V070.00.00

1

fig.	GEV No.	description	handle length (mm)	intake	ø (mm)	Ref. No.
1	541401	lever handle	330	10x10,6mm	55	0055221 0P.H025.00.00

1 2

fig.	GEV No.	description	tube ø (mm)	projection (mm)	spout height (mm)	Ref. No.
1	541405	HU-spout	-	270	220	0031350 0P.C048.00.00
2	542868	S spout	20	250	50	0P.C0S1.00.00 CS1

1 2

fig.	GEV No.	description	TS	Ref. No.
1	547492	tap aerator	M22x1	0P.P015.00.00 P015
2	541404	tap aerator	M24x1	0030205 0P.P065.00.00

1

fig.	GEV No.	description	connections	L (mm)	Ref. No.
1	542020[1]	shower hose	1/2"	1050	—
1	542021[1]	shower hose	1/2"	1200	—

[1]PVC coated

2

fig.	GEV No.	description	connections	L (mm)	Ref. No.
2	541812[1]	shower hose	1/2"	1075	—

[1]brass bush

3

fig.	GEV No.	description	connections	L (mm)	Ref. No.
3	542016	shower hose	1/2"	1100	—
3	542017	shower hose	1/2"	1200	—

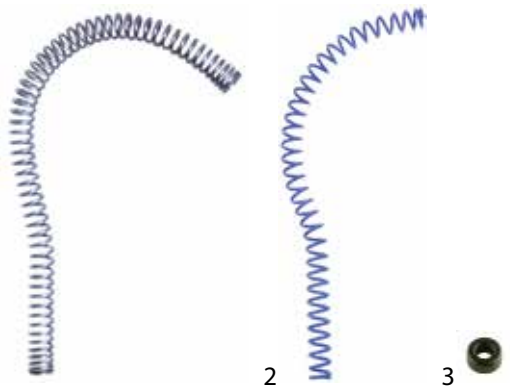

1 2 3

fig.	GEV No.	description	Ref. No.
1	548351	spring for pre-rinse units ED ø 40mm ID ø 28mm H 660mm wire gauge ø 6mm stainless steel	—
2	542871	spring for pre-rinse units H 660mm plastic coated stainless steel blue	0P.P300.00.00
3	547704	hose protection	0P.P006.00.00 9000221

1 2 3

fig.	GEV No.	description	Ref. No.
1	541394	wall holder for riser pipe black	0E.P034.00.00 9000222 P092 black
2	541395	bracket for spray gun black	0E.P035.00.00 9000223 P091 black
3	541419	spring holder black	0E.P007.00.00 9000216 P090 black

Find the complete and up-to-date range of products in our GEV Webshop

fig.	GEV No.	description	Ref. No.
4	542863	wall holder for riser pipe grey	P259(grey)
5	542864	bracket for spray gun grey	P260(grey)
6	542862	spring holder grey	P261(grey)

fig.	GEV No.	description	Ref. No.
7	541915	wall holder for riser pipe chrome-plated	0E.P034.00.00
8	541916	bracket for spray gun chrome-plated	0E.P035.00.00 9000223
9	541917	spring holder chrome-plated	0E.P007.00.00

fig.	GEV No.	description	Ref. No.
1	541918	adapter	0P.P274.00.00
2	547982	backflow preventer ø 15mm H 16mm Qty 1 pcs	—

suitable for KWC

fig.	GEV No.	description	connection	Ref. No.
1	542076	spray gun	1/2" ET	Z.536.530.145

fig.	GEV No.	description	Ref. No.
1	542890	filter for spray gun	Z.601.434
2	542886	screen ø 36mm H 4,2mm bore ø 1mm for spray gun	Z.636.518

fig.	GEV No.	description	TS	RA (°)	application
1	542969	ceramic tap head	3/4"	90	cold/hot water
2	542888	non-return valve tap head	M20x1.25	-	cold/hot water
3	540305	tap head	M20x1.25	-	cold/hot water

fig.	GEV No.	description	TS	RA (°)	application
4	535008	non-return valve tap head	M25x1.25	-	cold/hot water

fig.	GEV No.	description
1	542898	lever handle suitable for KWC
2	542897	lever handle suitable for KWC shaft intake ø 7,5mm D1 ø 26mm shaft length H1 11mm H2 19mm type C1
3	542895	lever handle suitable for KWC shaft intake ø 9,5mm D1 ø 22mm shaft length H1 11mm H2 17mm type D1

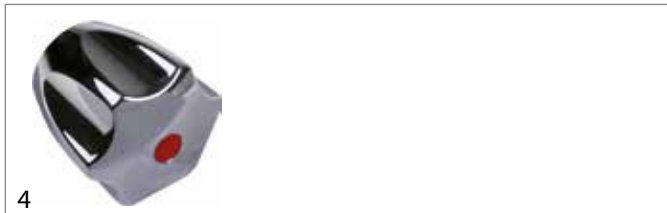

fig.	GEV No.	description
4	540308	star handle H2 27mm D1 ø 26mm type N suitable for KWC shaft intake ø 9,5mm

fig.	GEV No.	description
1	535015	ceramic cartridge D1 ø 46mm D2 ø 35mm H1 46,5mm H2 54,5mm H3 76mm suitable for KWC
2	542976	union nut for ceramic cartridge

fig.	GEV No.	description	fig.	GEV No.	description
1	542975	handle for catridge	2	542970	plastic insert

fig.	GEV No.	description
1	542899	HU-spout L 300mm
2	542889	S spout

fig.	GEV No.	description
3	542977	S spout spout projection 200mm
4	535503	S spout spout projection 300mm spout height 100mm S-spout 3/4“

fig.	GEV No.	description	TS	version
1	542880	tap aerator	1/2”	-
2	542980	tap aerator	3/4”	with plastic insert
3	542881	tap aerator	M22x1	with plastic insert

fig.	GEV No.	description	material	H (mm)
1	548351	spring	stainless steel	660

fig.	GEV No.	description	connections	L (mm)
1	540292[1]	shower hose	1/2”	875
1	541812[1]	shower hose	1/2”	1075
1	540070[1]	shower hose	1/2”	1250
1	540224[1]	shower hose	1/2”	1500

[1]brass bush [1]brass bush

fig.	GEV No.	description
1	542913	adaptor
2	542904	backflow preventer ø 16,5mm H 17,5mm Qty 1 pcs
3	540368	backflow preventer thread 3/8“ L 27mm Qty 1 pcs

fig.	GEV No.	description
4	542896	changeover valve set
5	542901	extension for wall holder thread M12 L 60mm
6	542902	extension for wall holder thread M12 L 90mm

fig.	GEV No.	description
7	542908	gasket set for swivel spout
8	542884	hose protection
9	542903	ring ø 26mm for spray gun holder slotted

fig.	GEV No.	description
10	542893	wall holder bore ø 26mm

Find the complete and up-to-date range of products in our GEV Webshop

suitable for MONOLITH

1

fig.	GEV No.	description	connection
1	547500	spray gun	1/2" ET

1 2 3

fig.	GEV No.	description	D1 ø (mm)	H1 (mm)
1	540452	ceramic cartridge	40	30
2	540450	ceramic cartridge	40	43
3	541403	ceramic cartridge	47	30.5

1

fig.	GEV No.	description	handle length (mm)	intake	ø (mm)	for catridge
1	540451	lever handle	58	10x10,6mm	53	ø40mm

1

fig.	GEV No.	description
1	547566	S spout spout projection 200mm spout height 120mm tube ø 18mm

1

fig.	GEV No.	description	connections	L (mm)
1	542065[1]	shower hose	1/2"	1000

[1]PVC coated

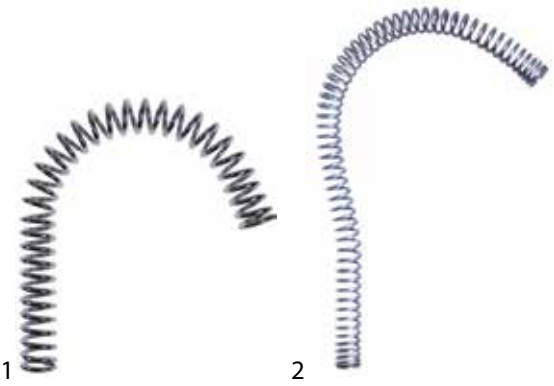

1 2

fig.	GEV No.	description	material	H (mm)
1	548288	spring	stainless steel	290
2	548351	spring	stainless steel	660

1 2 3

fig.	GEV No.	description
1	592187	holder kit for riser pipe
2	547702	holder kit length wall holder 49-230mm with hexagon key 2,5mm
3	547704	hose protection

suitable for RIVER

1 2 3 4

fig.	GEV No.	description	connection
1	548302	spray gun	1/2" ET
2	549249	spray gun	1/2" ET
3	548303	spray gun	1/2" ET
4	548300	spray gun	1/2" ET

1 2 3

fig.	GEV No.	description	TS	RA (°)	application
1	548416	tap head	1/2"	-	cold/hot water
2	548414	ceramic tap head	1/2"	90	cold water
2	548425	ceramic tap head	1/2"	180	cold water
3	548415	ceramic tap head	1/2"	90	hot water
3	548424	ceramic tap head	1/2"	180	hot water

fig.	GEV No.	description	version	application
1	548334	lever handle	for tap heads 1/2”	cold/hot water
2	547965	triangular handle	for tap heads 1/2” and 3/4”	cold/hot water

fig.	GEV No.	description	D1 ø (mm)	H1 (mm)
1	540452	ceramic cartridge	40	30

fig.	GEV No.	description	handle length (mm)	intake	ø (mm)
1	547787	lever handle	360	10x10,6mm	54

fig.	GEV No.	description	tube ø (mm)	projection (mm)	spout height (mm)
1	545070	HU-spout	20	200	100
1	545071	HU-spout	20	250	130
1	545072	HU-spout	20	300	180

fig.	GEV No.	description	connections	L (mm)
1	542063	shower hose	1/2”	630

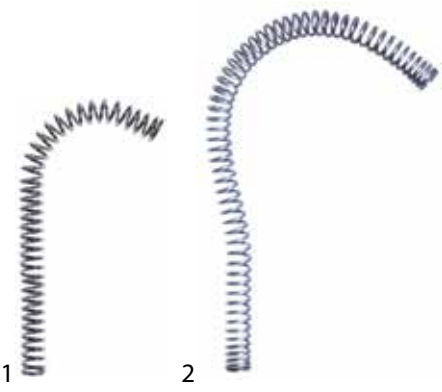

fig.	GEV No.	description	material	H (mm)
1	548290	spring	stainless steel	410
2	548351	spring	stainless steel	660

fig.	GEV No.	description
1	548309	bracket for spray gun
2	548311	spring holder

fig.	GEV No.	description
3	548310	bracket for spray gun
4	548308	wall holder for pre-rinse unit

suitable for RUBINETTERIE DEL FRIULI

fig.	GEV No.	description
1	548192	spray gun connection 1/2“ ET black
2	540089	spray gun connection 1/2“ ET type MILANO
3	540004	spray gun connection 1/2“ ET type UDINE

fig.	GEV No.	description	TS	RA (°)	application
1	548416	tap head	1/2”	-	cold/hot water
2	548414	ceramic tap head	1/2”	90	cold water
3	548415	ceramic tap head	1/2”	90	hot water

Find the complete and up-to-date range of products in our GEV Webshop

fig.	GEV No.	description
1	548164	cross handle marking blue
2	548163	cross handle marking red
3	548165	screw cap suitable for RUBINETTERIE DEL FRIULI

fig.	GEV No.	description
4	548210	lever handle ø 31,5mm for tap heads 1/2"
5	541533	handle cold water H 39,5mm blue ID ø 32,5mm
6	541534	handle hot water H 39,5mm red ID ø 32,5mm

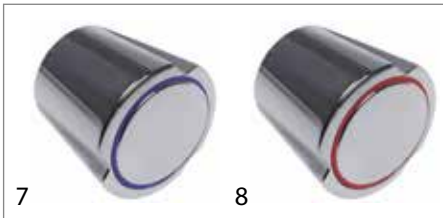

fig.	GEV No.	description
7	592180	hood handle for tap heads 1/2" and 3/4" cold water
8	592181	hood handle for tap heads 1/2" and 3/4" hot water

fig.	GEV No.	description	handle length (mm)	intake	ø (mm)	for catridge
1	540451	lever handle	58	10x10,6mm	53	ø40mm
2	547143	lever handle	180	10x10,6mm	51	ø40mm

fig.	GEV No.	description
1	540196	HU-spout spout projection 200mm spout height 120mm
1	540197	HU-spout spout projection 250mm spout height 190mm
2	547566	S spout spout projection 200mm spout height 120mm

fig.	GEV No.	description	connections	L (mm)
1	520466	flex hose	3/8" - M10x1	500
1	520465	flex hose	1/2" - M10x1	500

fig.	GEV No.	description	connections	L (mm)
2	592222[1]	shower hose	1/2"	630
2	540292[1]	shower hose	1/2"	875
2	540066[1]	shower hose	1/2"	1000
2	541812[1]	shower hose	1/2"	1075
2	540070[1]	shower hose	1/2"	1250

[1]brass bush

fig.	GEV No.	description	connections	L (mm)
3	542065[1]	shower hose	1/2"	1000

[1]PVC coated

fig.	GEV No.	description
1	548351	spring for pre-rinse units ED ø 40mm ID ø 28mm H 660mm wire gauge ø 6mm stainless steel
2	548148	spring holder

fig.	GEV No.	description
1	548146	wall holder complete for riser pipe
2	548147	wall holder complete for riser pipe

1

2

fig.	GEV No.	description
1	548198	backflow preventer ø 19mm H 17mm for eccentrics
2	547983	swivel tap for pre-rinse units without outlet